Keysight N5700 Series
System DC Power Supplies
Models: N5741A-49A, N5750A-52A, N5761A-69A, N5770A-72A

Data Sheet

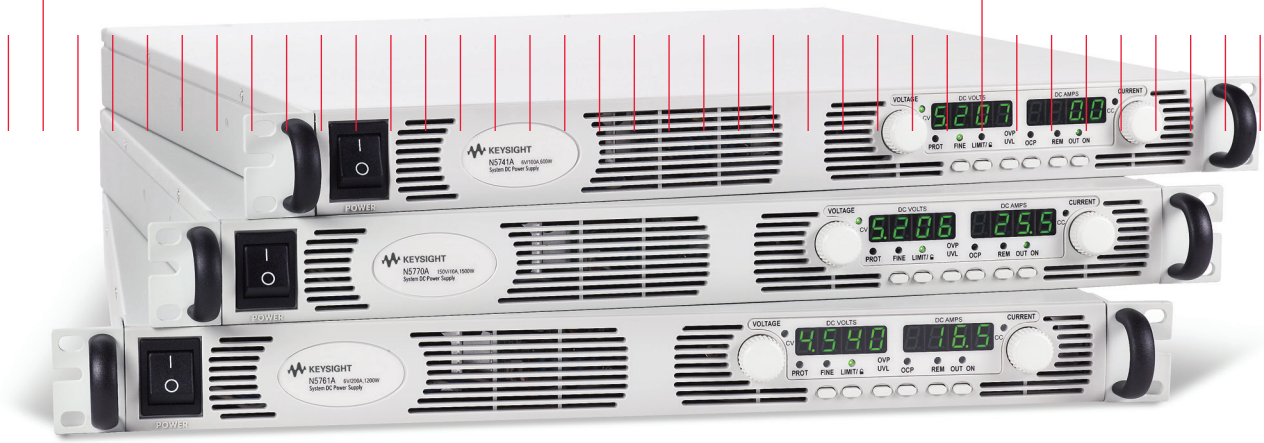

KEYSIGHT TECHNOLOGIES

Family of Affordable Basic System DC Power Supplies

- 24 models: 750 W and 1500 W output power
- Up to 600 V and up to 180 A
- Small high density 1 U package
- Built-in voltage and current measurement
- Full protection from over-voltage and over-current
- 85-265 Vac universal AC input
- Command compatibility for Sorensen DLM and Xantrex XFR DC supplies
- LAN, USB, and GPIB interfaces standard
- Fully compliant to LXI Class C specification

The Keysight Technologies, Inc. N5700 Series system DC power supplies give you just the right performance – at just the right price – in a compact (1 U) package. This family of affordable 750 W and 1500 W single-output programmable DC power supplies consists of 24 models for simple DC power applications. They provide stable output power, built-in voltage and current measurement, and output voltage and current from 6 V to 600 V and 1.3 A to 180 A.

These economical supplies offer many system-ready features like multiple standard I/O interfaces to simplify and accelerate test-system development for R&D, design validation, and manufacturing engineers in the aerospace/defense, automotive, component and communications industries.

Small, high-density package saves you rack space

The N5700 provides up to 1500 W in a small space-saving 1 U-high, 19-inch-wide package. Its air vents are in the front, side and rear (not on the top or bottom), so you can stack other instruments directly above or below it to save valuable rack space.

Easy front-panel operation

You can quickly and easily operate the power supply with its rotary knobs and buttons. Using the front-panel controls, you can make coarse or fine adjustments of output voltage and current, protection settings, and set power-on states (last setting memory or factory default setting). The output voltage and current are displayed simultaneously, and LED indicators show power supply status and operating modes. You can lock the front panel controls to protect against accidental power-supply parameter changes.

Extensive device protection

To safeguard your device from damage, the N5700 Series power supplies provide over-temperature, over-current and over-voltage protection (OVP) to shut down the power supply output when a fault condition occurs. They also offer an under-voltage limit (UVL) that prevents adjustment of the output voltage below a certain limit. The combination of UVL and OVP capabilities lets you create a protection window for sensitive load circuitry.

Simplify system connections

The N5700 Series power supplies come standard with GPIB, Ethernet/LAN, and USB 2.0 interfaces giving you the flexibility to use your I/O interface of choice today and in the future. The N5700 is fully compliant with the LXI Class C specification.

Figure 1. Front-panel control knobs and buttons make it easy to use N5700 power supplies.

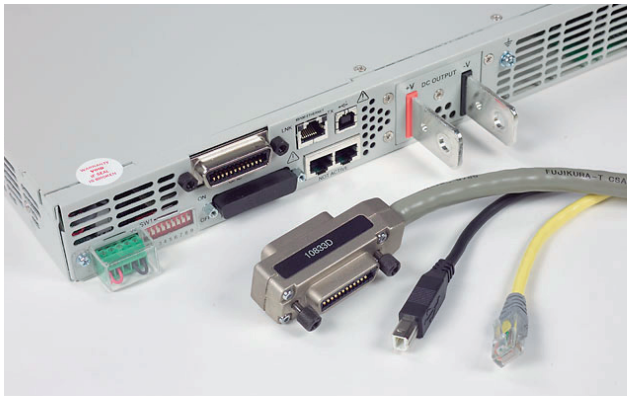

Figure 2. Built-in Ethernet, USB 2.0, and GPIB interfaces enable easy system connections.

Remote access and control

The built-in Web server provides remote access and control of the instrument via a standard browser such as Microsoft Internet Explorer. Using the Web browser, you can set up, monitor and operate the N5700 remotely.

Easy system integration and configuration

To simplify system development, the N5700 comes standard with IVI-COM drivers. The N5700 supports the easy-to-use SCPI (Standard Commands for Programmable Instruments).

Command compatibility

The N5700 includes a compatibility command set for the Xantrex XFR series power supplies, the Sorensen DLM series power supplies, and the Keysight 603x series power supplies. This simplifies system integration when converting to the N5700. For a comparison of these products, see application notes:

- *Side-by-side comparison:* Keysight N5700 Series System DC Source and Sorensen DLM DC Power Supply, AN 1502-1, 5989-1628EN
- *Side-by-side comparison:* Keysight N5700 Series System DC Source and Xantrex XFR AN 1502-2, 5989-1630EN

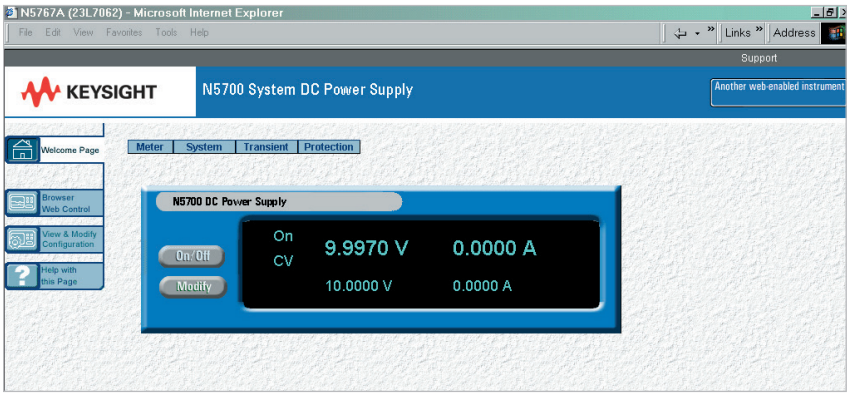

Figure 3. N5700 series web graphical user interface for remote access and control of the power supply.

Flexible configuration: connect multiple units in parallel and series

Should you need greater output power, the N5700 series power supplies give you the flexibility to connect in parallel up to four similarly rated units for greater output current and connect two similarly rated units in series for greater output voltage (see output terminal isolation information).

Analog programming and monitoring

The output voltage and current can be programmed from zero to full scale by either an analog voltage 0 to 5 V or 0 to 10 V or by resistances of 0 to 5 kΩ or 0 to 10 kΩ.

Universal AC input

All N5700 models have universal AC input so they can be automatically operated from any AC mains input voltage worldwide. They can be operated from line voltages of 85 – 265 Vac, 47 to 63 Hz, with no switch to set or fuses to change when you switch from one voltage standard to another. They also provide power factor correction.

Rack mounting

The rack mount ears and handles are provided standard with every unit. In addition the N5740A rack mount slide kit makes it easy to integrate an N5700 into a test rack by providing all the necessary hardware to rack mount an N5700 series power supply in only 1 U of rack space.

Performance specifications

Unless otherwise noted, specifications are warranted over the ambient temperature range of 0 to 40 °C.

			N5741A	N5742A	N5743A	N5744A	N5745A	N5746A
DC output ratings[1]	Voltage		6 V	8 V	12.5 V	20 V	30 V	40 V
	Current		100 A	90 A	60 A	38 A	25 A	19 A
	Power		600 W	720 W	750 W	760 W	750 W	760 W
Output ripple and noise	CV p-p[2]		60 mV	60 mV	60 mV	60 mV	60 mV	60 mV
	CV rms[3]		8 mV	8 mV	8 mV	8 mV	8 mV	8 mV
Load effect (change from 10% to 90%)	Voltage		2.6 mV	2.8 mV	3.25 mV	4 mV	5 mV	6 mV
	Current		25 mA	23 mA	17 mA	12.6 mA	10 mA	8.8 mA
Source effect (change from 85-132 VAC input or 170-265 VAC input)	Voltage		2.6 mV	2.8 mV	3.25 mV	4 mV	5 mV	6 mV
	Current		12 mA	11 mA	8 mA	5.8 mA	4.5 mA	3.9 mA
Programming accuracy[1]	Voltage	0.05%+	3 mV	4 mV	6.25 mV	10 mV	15 mV	20 mV
	Current	0.1%+	100 mA	90 mA	60 mA	38 mA	25 mA	19 mA
Measurement accuracy	Voltage	0.1%+	6 mV	8 mV	12.5 mV	20 mV	30 mV	40 mV
	Current	0.1%+	300 mA	270 mA	180 mA	114 mA	75 mA	57 mA
Load transient recovery time[4]	Time		≤1.5 ms	≤1.5 ms	≤1.5 ms	≤1 ms	≤1 ms	≤1 ms
Supplemental Characteristics	**Supplemental characteristics are not warranted but are descriptions of typical performance determined either by design or type testing**							
Output response time (settle to within ±1.0% of the rated output, with a resistive load)	Up, full load		0.08 s	0.08 s	0.08 s	0.08 s	0.08 s	0.08 s
	Down, full load		0.05 s	0.05 s	0.05 s	0.05 s	0.08 s	0.08 s
	Down, no load		0.5 s	0.6 s	0.7 s	0.8 s	0.9 s	1.0 s
Command response time[5]	55 ms							
Data readback transfer time[6]	3 ms							
Remote sense compensation	Volts/load lead		1 V	1 V	1 V	1 V	1.5 V	2 V
Over-voltage protection	Range		0.5–7.5 V	0.5–10 V	1–15 V	1–24 V	2–36 V	2–44 V
	Accuracy		0.06 V	0.08 V	0.125 V	0.20 V	0.30 V	0.40 V
Output ripple and noise[7]	CC rms		200 mA	180 mA	120 mA	76 mA	63 mA	48 mA
Programming resolution measurement resolution	Voltage		0.72 mV	0.96 mV	1.5 mV	2.4 mV	3.6 mV	4.8 mV
	Current		12 mA	10.8 mA	7.2 mA	4.56 mA	3 mA	2.3 mA
Front panel display accuracy (4 digits; ±1 count)	Voltage		0.03 V	0.04 V	0.06 V	0.10 V	0.15 V	0.20 V
	Current		0.50 A	0.45 A	0.30 A	0.19 A	0.13 A	0.10 A

Notes:

1. Minimum voltage is guaranteed to a maximum of 0.2% of the rated output voltage. Minimum current is guaranteed to a maximum of 0.4% of the rated output current.
2. Up to 20 MHz
3. From 5 Hz – 1 MHz
4. Time for output voltage to recover within 0.5% of its rated output for a load change from 10 to 90% of its rated output current. Voltage set point from 10% to 100% of rated output
5. Add this to the output reponse time to obtain the total programming time
6. Time to provide data back to the controller using LAN interface (does not include A/D conversion time)
7. From 5 Hz – 1 MHz, at 10% to 100% of output voltage at full load (for 6 V units from 33% to 100% of output voltage)

Performance specifications

Unless otherwise noted, specifications are warranted over the ambient temperature range of 0 to 40°C.

			N5747A	N5748A	N5749A	N5750A	N5751A	N5752A
DC output ratings[1]	Voltage		60 V	80 V	100 V	150 V	300 V	600 V
	Current		12.5 A	9.5 A	7.5 A	5 A	2.5 A	1.3 A
	Power		750 W	760 W	750 W	750 W	750 W	780 W
Output ripple and noise	CV p-p[2]		60 mV	80 mV	80 mV	100 mV	150 mV	300 mV
	CV rms[3]		8 mV	8 mV	8 mV	12 mV	20 mV	60 mV
Load effect (change from 10% to 90%)	Voltage		8 mV	10 mV	12 mV	17 mV	32 mV	62 mV
	Current		7.5 mA	6.9 mA	6.5 mA	6 mA	5.5 mA	5.26 mA
Source effect (change from 85-132 VAC input or 170-265 VAC input)	Voltage		8 mV	10 mV	12 mV	17 mV	32 mV	62 mV
	Current		3.25 mA	2.95 mA	2.75 mA	2.5 mA	2.25 mA	2.13 mA
Programming accuracy[1]	Voltage	0.05%+	30 mV	40 mV	50 mV	75 mV	150 mV	300 mV
	Current	0.1%+	12.5 mA	9.5 mA	7.5 mA	5 mA	2.5 mA	1.3 mA
Measurement accuracy	Voltage	0.1%+	60 mV	80 mV	100 mV	150 mV	300 mV	600 mV
	Current	0.1%+	37.5 mA	28.5 mA	22.5 mA	15 mA	7.5 mA	3.9 mA
Load transient recovery time[4]	Time		≤1 ms	≤1 ms	≤1 ms	≤2 ms	≤2 ms	≤2 ms
Supplemental Characteristics	Supplemental characteristics are not warranted but are descriptions of typical performance determined either by design or type testing							
Output response time (settle to within ±1.0% of the rated output, with a resistive load)	Up, full load		0.08 s	0.15 s	0.15 s	0.15 s	0.15 s	0.25 s
	Down, full load		0.08 s	0.15 s	0.15 s	0.15 s	0.15 s	0.30 s
	Down, no load		1.1 s	1.2 s	1.5 s	2.0 s	3.0 s	4.0 s
Command response time[5]	55 ms							
Data readback transfer time[6]	3 ms							
Remote sense compensation	Volts/load lead		3 V	4 V	5 V	5 V	5 V	5 V
Over-voltage protection	Range		5–66 V	5–88 V	5–110 V	5–165 V	5–330 V	5–660 V
	Accuracy		0.60 V	0.80 V	1 V	1.5 V	3 V	6 V
Output ripple and noise[7]	CC rms		38 mA	29 mA	23 mA	18 mA	13 mA	8 m
Programming resolution measurement resolution	Voltage		7.2 mV	9.6 mV	12 mV	18 mV	36 mV	72 mV
	Current		1.5 mA	1.14 mA	0.9 mA	0.6 mA	0.3 mA	0.156 mA
Front panel display accuracy (4 digits; ±1 count)	Voltage		0.3 V	0.4 V	0.5 V	0.75 V	1.5 V	3 V
	Current		0.0625 A	0.0475 A	0.0375 A	0.0250 A	0.0125A	0.0065 A

Notes:

1. Minimum voltage is guaranteed to a maximum of 0.2% of the rated output voltage.
   Minimum current is guaranteed to a maximum of 0.4% of the rated output current.
2. Up to 20 MHz
3. From 5 Hz – 1 MHz
4. Time for output voltage to recover within 0.5% of its rated output for a load change from 10 to 90% of its rated output current. Voltage set point from 10% to 100% of rated output
5. Add this to the output reponse time to obtain the total programming time
6. Time to provide data back to the controller using LAN interface (does not include A/D conversion time)
7. From 5 Hz – 1 MHz, at 10% to 100% of output voltage at full load (for 6 V units from 33% to 100% of output voltage)

Performance specifications

Unless otherwise noted, specifications are warranted over the ambient temperature range of 0 to 40°C.

			N5761A	N5762A	N5763A	N5764A	N5765A	N5766A
DC output ratings[1]	Voltage		6 V	8 V	12.5 V	20 V	30 V	40 V
	Current		180 A	165 A	120 A	76 A	50 A	38 A
	Power		1080 W	1320 W	1500 W	1520 W	1500 W	1520 W
Output ripple and noise	CV p-p[2]		60 mV	60 mV	60 mV	60 mV	60 mV	60 mV
	CV rms[3]		8 mV	8 mV	8 mV	8 mV	8 mV	8 mV
Load effect (change from 10% to 90%)	Voltage		2.6 mV	2.8 mV	3.25 mV	4 mV	5 mV	6 mV
	Current		41 mA	38 mA	29 mA	20.2 mA	15 mA	12.6 mA
Source effect (change from 85-132 VAC input or 170-265 VAC input)	Voltage		2.6 mV	2.8 mV	3.25 mV	4 mV	5 mV	6 mV
	Current		20 mA	18.5 mA	14 mA	9.6 mA	7 mA	5.8 mA
Programming accuracy[1]	Voltage	0.05%+	3 mV	4 mV	6.25 mV	10 mV	15 mV	20 mV
	Current	0.1%+	180 mA	165 mA	120 mA	76 mA	50 mA	38 mA
Measurement accuracy	Voltage	0.1%+	6 mV	8 mV	12.5 mV	20 mV	30 mV	40 mV
	Current	0.1%+	540 mA	495 mA	360 mA	228 mA	150 mA	114 mA
Load transient recovery time[4]	Time		≤1.5 ms	≤1.5 ms	≤1.5 ms	≤1 ms	≤1 ms	≤1 ms
Supplemental characteristics	Supplemental characteristics are not warranted but are descriptions of typical performance determined either by design or type testing.							
Output response time (settle to within ±1.0% of the rated output, with a resistive load)	Up, full load		0.08 s	0.08 s	0.08 s	0.08 s	0.08 s	0.08 s
	Down, full load		0.05 s	0.05 s	0.05 s	0.05 s	0.08 s	0.08 s
	Down, no load		0.5 s	0.6 s	0.7 s	0.8 s	0.9 s	1.0 s
Command response time[5]	55 ms							
Data readback transfer time[6]	3 ms							
Remote sense compensation	Volts/load lead		1 V	1 V	1 V	1 V	1.5 V	2 V
Over-voltage protection	Range		0.5–7.5 V	0.5–10 V	1–15 V	1–24 V	2–36 V	2–44 V
	Accuracy		0.06 V	0.08 V	0.125 V	0.20 V	0.30 V	0.40 V
Output ripple and noise[7]	CC rms		360 mA	330 mA	240 mA	152 mA	125 mA	95 mA
Programming resolution measurement resolution	Voltage		0.72 mV	0.96 mV	1.5 mV	2.4 mV	3.6 mV	4.8 mV
	Current		21.6 mA	19.8 mA	14.4 mA	9.12 mA	6 mA	4.6 mA
Front panel display accuracy (4 digits; ±1 count)	Voltage		0.03 V	0.04 V	0.0625 V	0.1 V	0.15 V	0.2 V
	Current		0.90 A	0.825 A	0.60 A	0.38 A	0.25 A	0.19 A

Notes:

1. Minimum voltage is guaranteed to a maximum of 0.2% of the rated output voltage.
   Minimum current is guaranteed to a maximum of 0.4% of the rated output current.
2. Up to 20 MHz
3. From 5 Hz – 1 MHz
4. Time for output voltage to recover within 0.5% of its rated output for a load change from 10 to 90% of its rated output current. Voltage set point from 10% to 100% of rated output
5. Add this to the output reponse time to obtain the total programming time
6. Time to provide data back to the controller using LAN interface (does not include A/D conversion time)
7. From 5 Hz – 1 MHz, at 10% to 100% of output voltage at full load (for 6 V units from 33% to 100% of output voltage)

Performance specifications

Unless otherwise noted, specifications are warranted over the ambient temperature range of 0 to 40°C.

			N5767A	N5768A	N5769A	N5770A	N5771A	N5772A
DC output ratings[1]	Voltage		60 V	80 V	100 V	150 V	300 V	600 V
	Current		25 A	19 A	15 A	10 A	5 A	2.6 A
	Power		1500 W	1520 W	1500 W	1500 W	1500 W	1560 W
Output ripple and noise	CV p-p[2]		60 mV	80 mV	80 mV	100 mV	150 mV	300 mV
	CV rms[3]		8 mV	8 mV	8 mV	12 mV	20 mV	60 mV
Load effect (change from 10% to 90%)	Voltage		8 mV	10 mV	12 mV	17 mV	32 mV	62 mV
	Current		10 mA	8.8 mA	8 mA	7 mA	6 mA	5.5 mA
Source effect (change from 85-132 VAC input or 170-265 VAC input)	Voltage		8 mV	10 mV	12 mV	17 mV	32 mV	62 mV
	Current		4.5 mA	3.9 mA	3.5 mA	3 mA	2.5 mA	2.26 mA
Programming accuracy[1]	Voltage	0.05%+	30 mV	40 mV	50 mV	75 mV	150 mV	300 mV
	Current	0.1%+	25 mA	19 mA	15 mA	10 mA	5 mA	2.6 mA
Measurement accuracy	Voltage	0.1%+	60 mV	80 mV	100 mV	150 mV	300 mV	600 mV
	Current	0.1%+	75 mA	57 mA	45 mA	30 mA	15 mA	7.8 mA
Load transient recovery time[4]	Time		≤1 ms	≤1 ms	≤1 ms	≤2 ms	≤2 ms	≤2 ms
Supplemental Characteristics	Supplemental characteristics are not warranted but are descriptions of typical performance determined either by design or type testing							
Output response time (settle to within ±1.0% of the rated output, with a resistive load)	Up, full load		0.08 s	0.15 s	0.15 s	0.15 s	0.15 s	0.25 s
	Down, full load		0.08 s	0.15 s	0.15 s	0.15 s	0.15 s	0.30 s
	Down, no load		1.1 s	1.2 s	1.5 s	2.0 s	3.0 s	4.0 s
Command response time[5]	55 ms							
Data readback transfer time[6]	3 ms							
Remote sense compensation	Volts/load lead		3 V	4 V	5 V	5 V	5 V	5 V
Over-voltage protection	Range		5–66 V	5–88 V	5–110 V	5–165 V	5–330 V	5–660 V
	Accuracy		0.60 V	0.80 V	1 V	1.5 V	3 V	6 V
Output ripple and noise[7]	CC rms		75 mA	57 mA	45 mA	35 mA	25 mA	12 m
Programming resolution measurement resolution	Voltage		7.2 mV	9.6 mV	12 mV	18 mV	36 mV	72 mV
	Current		3 mA	2.28 mA	1.8 mA	1.2 mA	0.6 mA	0.312 mA
Front panel display accuracy (4 digits; ±1 count)	Voltage		0.3 V	0.4 V	0.5 V	0.75 V	1.5 V	3 V
	Current		0.125 A	0.095 A	0.075 A	0.050 A	0.025 A	0.013 A

Notes:

1. Minimum voltage is guaranteed to a maximum of 0.2% of the rated output voltage.
   Minimum current is guaranteed to a maximum of 0.4% of the rated output current.
2. Up to 20 MHz
3. From 5 Hz – 1 MHz
4. Time for output voltage to recover within 0.5% of its rated output for a load change from 10 to 90% of its rated output current. Voltage set point from 10% to 100% of rated output
5. Add this to the output reponse time to obtain the total programming time
6. Time to provide data back to the controller using LAN interface (does not include A/D conversion time)
7. From 5 Hz – 1 MHz, at 10% to 100% of output voltage at full load (for 6 V units from 33% to 100% of output voltage)

WARNING Shock Hazard

- *For models up to 60 VDC rated output, no point on the output shall be more than ± 60 VDC above or below chassis ground.*
- *For models greater than 60 VDC rated output, no point on the Positive output shall be more than ± 600 VDC above or below chassis ground.*
- *For models greater than 60 VDC rated output, no point on the Negative output shall be more than ± 400 VDC above or below chassis ground.*

Supplemental Characteristics for All Model Numbers

Series and parallel capability

Parallel operation
Up to 4 units can be connected in master/slave mode
Series operation
Up to 2 units can be connected in series

Output terminal isolation

6 V to 60 V units
No output terminal may be more than ±60 VDC from any other terminal or chassis ground
80 V to 600 V units
No output terminal may be more than ±600 VDC from any other terminal or chassis ground

Store-recall states

Volatile memory locations: 16

Analog programming

(of output voltage and current)
Input signal
Selectable;
0 to 5 V / 0 to 10 V full scale
Input impedance
Selectable;
0 to 5 kΩ / 0 to 10 kΩ full scale

Interface capabilities

GPIB
SCPI – 1993, IEEE 488.2 compliant interface
USB 2.0
Requires Keysight I/O library version L.01.01
10/100 LAN
Requires Keysight I/O library version L.01.01
Web server
Built-in Web server requires Internet Explorer 5+ or Netscape 6.2+

Environmental conditions

Environment
Indoor use, installation category II (AC input), pollution degree 2
Operating temperature
0°C to 40°C @ 100% load
Storage temperature
–20°C to 70°C
Operating humidity
30% to 90% relative humidity (no condensation)
Storage humidity
10% to 95% relative humidity (no condensation)
Altitude
- Up to 3000 meters. Derate the output current by 2%/100 m above 2000 m.
- Derate the maximum ambient temperature by 1 °C/100 m above 2000 m.

Regulatory compliance

EMC
- European EMC directive 89/336/EEC for Class A products
- Australian C- Tick mark
- This ISM device complies with Canadian ICES-001.
- Cet appareil ISM est conforme à la norme NMB-001 du Canada.

Safety
- European Low Voltage Directive 73/23/EEC
- US and Canadian safety standards
- Any LEDs used in this product are Class 1 as per IEC 825-1

Acoustic noise declaration
Emission directive:
- Sound pressure Lp <70 dB(A), At operator position, *Normal operation, *According to EN 27779 (Type Test).
- Schalldruckpegel Lp <70 dB(A) *Am Arbeitsplatz, *Normaler Betrieb, *Nach EN 27779 (Typprüfung).

AC input

Nominal input
100 – 240 VAC; 50/60 Hz
Input current 750 W
10.5 A @ 100 VAC nominal;
5 A @ 200 VAC nominal
Input current 1500 W
21 A @ 100 VAC nominal;
11 A @ 200 VAC nominal
Input range
85 – 265 VAC; 47 – 63 Hz.
Power factor
0.99 at nominal input and rated output power
Efficiency
76% – 87% for 750 W units;
77% – 88% for 1500 W units
Inrush current
<25 A for 750 W units;
<50 A for 1500 W units

Dimensions

(excluding connectors, and handles)

Height	43.6 mm (1.72 in)
Width	422.8 mm (16.65 in)
Depth	432.8 mm (17.04 in)

Weight

750 W	7 Kg (15.4 lbs.)
1500 W	8.5 Kg (18.7 lbs.)

Outline Diagram

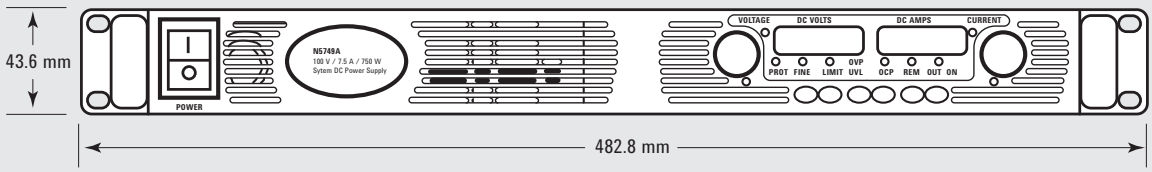

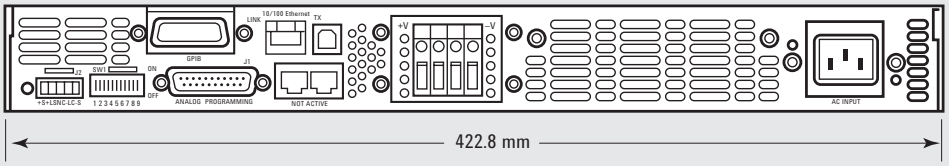

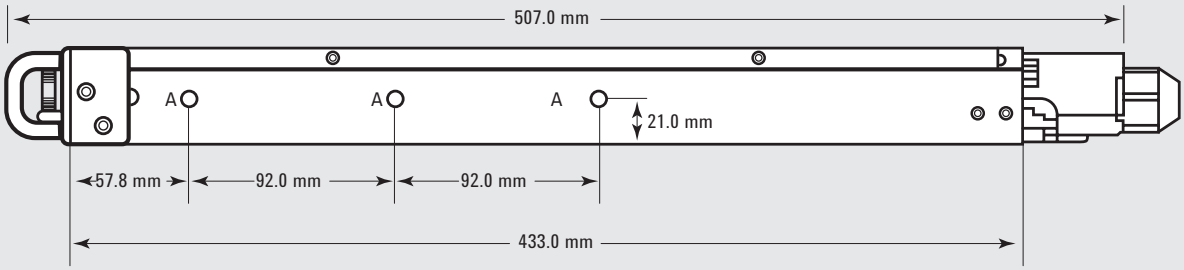

DC output
Bus-bar detail
6 V to 60 V
models

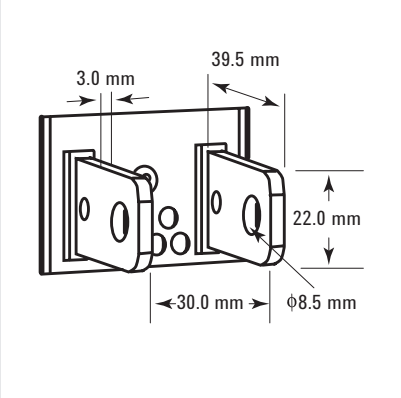

AC input
Strain-relief detail
1500 W models

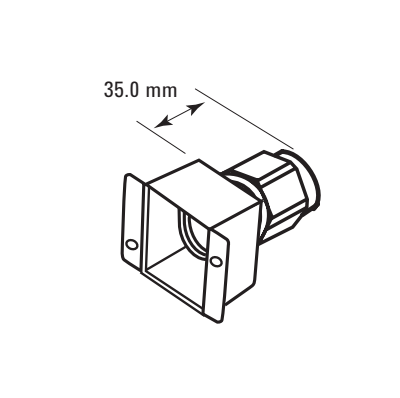

Front and Rear Panel Detail

Front Panel
(All Models)

= air flow (in front, out rear)

Rear Panel*
(6 V to 60 V, 1500 W Models)

(80 V to 600 V, 1500 W Models)

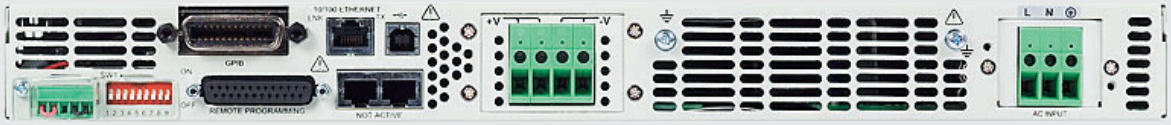

(6 V to 60 V, 750 W Models)

(80 V to 600 V, 750 W Models)

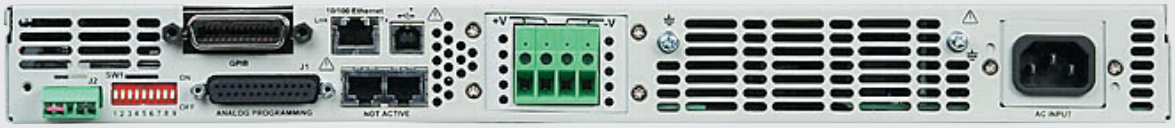

Ordering Information

Available models

750 W Models		
N5741A	System DC Power Supply	6 V, 100 A, 600 W
N5742A	System DC Power Supply	8 V, 90 A, 720 W
N5743A	System DC Power Supply	12.5 V, 60 A, 750 W
N5744A	System DC Power Supply	20 V, 38 A, 760 W
N5745A	System DC Power Supply	30 V, 25 A, 750 W
N5746A	System DC Power Supply	40 V, 19 A, 760 W
N5747A	System DC Power Supply	60 V, 12.5 A, 750 W
N5748A	System DC Power Supply	80 V, 9.5 A, 760 W
N5749A	System DC Power Supply	100 V, 7.5 A, 750 W
N5750A	System DC Power Supply	150 V, 5 A, 750 W
N5751A	System DC Power Supply	300 V, 2.5 A, 750 W
N5752A	System DC Power Supply	600 V, 1.3 A, 780 W
1500 W Models		
N5761A	System DC Power Supply	6 V, 180 A, 1080 W
N5762A	System DC Power Supply	8 V, 165 A, 1320 W
N5763A	System DC Power Supply	12.5 V, 120 A, 1500 W
N5764A	System DC Power Supply	20 V, 76 A, 1520 W
N5765A	System DC Power Supply	30 V, 50 A, 1500 W
N5766A	System DC Power Supply	40 V, 38 A, 1520 W
N5767A	System DC Power Supply	60 V, 25 A, 1500 W
N5768A	System DC Power Supply	80 V, 19 A, 1520 W
N5769A	System DC Power Supply	100 V, 15 A, 1500 W
N5770A	System DC Power Supply	150 V, 10 A, 1500 W
N5771A	System DC Power Supply	300 V, 5 A, 1500 W
N5772A	System DC Power Supply	600 V, 2.6 A, 1560 W

Options

750 W Models

Opt 900 Power Cord, United Kingdom
Opt 902 Power Cord, Europe
Opt 903 Power Cord, USA, Canada
Opt 918 Power Cord, Japan
Opt 922 Power Cord, China

1500 W Models

Opt 861 Unterminated Power Cord, USA, Canada, Japan, China, Other
Opt 862 Harmonized Unterminated Power Cord, Europe

Accessories

N5740A Rack Mount Slide Kit (required for rack mounting; standard system 11 rack-mounting hardware will not work)

Related Literature

These application notes will help you compare Keysight system DC sources with power supplies from other manufacturers:

- *Side-by-Side Comparison: Keysight N5700 Series System DC Source and Sorensen DLM DC Power Supply, AN 1502-1,* 5989-1628EN
http://literature.cdn.keysight.com/5989-1628EN.pdf
- *How to Convert from a Sorensen DLM to an Keysight N5700, AN 1503-1,* 5989-1629EN
http://literature.cdn.keysight.com/5989-1629EN.pdf
- *Side-by-Side Comparison: Keysight N5700 Series System DC Source and Xantrex XFR System Power Supplies, AN 1502-2,* 5989-1630EN
http://literature.cdn.keysight.com/5989-1630EN.pdf
- *How to Convert from a Xantrex XFR to an Keysight N5700, AN 1503-2,* 5989-1631EN
http://literature.cdn.keysight.com/5989-1631EN.pdf
- *Trends in Medium Power (~1 kW) DC Power Supplies,* 5989-1331EN
http://literature.cdn.keysight.com/5989-1331EN.pdf

Keysight's IO Libraries Suite ships with the N5700 to help you quickly establish an error-free connection between your PC and instruments - regardless of the vendor. It provides robust instrument control and works with the software development environment you choose.

For additional description of Keysight's IO Libraries Suite features and installation requirements, please go to www.keysight.com/find/iosuite-datasheet

Evolving Since 1939

Our unique combination of hardware, software, services, and people can help you reach your next breakthrough. We are unlocking the future of technology.
From Hewlett-Packard to Agilent to Keysight.

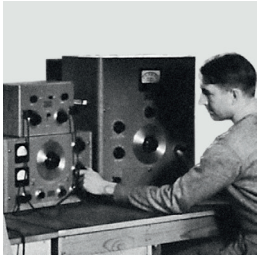

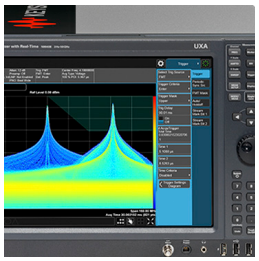

myKeysight

myKeysight
www.keysight.com/find/mykeysight
A personalized view into the information most relevant to you.

http://www.keysight.com/find/emt_product_registration
Register your products to get up-to-date product information and find warranty information.

KEYSIGHT SERVICES
Accelerate Technology Adoption.
Lower costs.

Keysight Services
www.keysight.com/find/service
Keysight Services can help from acquisition to renewal across your instrument's lifecycle. Our comprehensive service offerings—one-stop calibration, repair, asset management, technology refresh, consulting, training and more—helps you improve product quality and lower costs.

CALIBRATION UP TO 10 YEARS WARRANTY
ASSURANCE PLANS

Keysight Assurance Plans
www.keysight.com/find/AssurancePlans
Up to ten years of protection and no budgetary surprises to ensure your instruments are operating to specification, so you can rely on accurate measurements.

Keysight Channel Partners
www.keysight.com/find/channelpartners
Get the best of both worlds: Keysight's measurement expertise and product breadth, combined with channel partner convenience.

www.keysight.com/find/dcpowersupplies

For more information on Keysight Technologies' products, applications or services, please contact your local Keysight office. The complete list is available at:
www.keysight.com/find/contactus

Americas	
Canada	(877) 894 4414
Brazil	55 11 3351 7010
Mexico	001 800 254 2440
United States	(800) 829 4444
Asia Pacific	
Australia	1 800 629 485
China	800 810 0189
Hong Kong	800 938 693
India	1 800 11 2626
Japan	0120 (421) 345
Korea	080 769 0800
Malaysia	1 800 888 848
Singapore	1 800 375 8100
Taiwan	0800 047 866
Other AP Countries	(65) 6375 8100
Europe & Middle East	
Austria	0800 001122
Belgium	0800 58580
Finland	0800 523252
France	0805 980333
Germany	0800 6270999
Ireland	1800 832700
Israel	1 809 343051
Italy	800 599100
Luxembourg	+32 800 58580
Netherlands	0800 0233200
Russia	8800 5009286
Spain	800 000154
Sweden	0200 882255
Switzerland	0800 805353
	Opt. 1 (DE)
	Opt. 2 (FR)
	Opt. 3 (IT)
United Kingdom	0800 0260637

For other unlisted countries:
www.keysight.com/find/contactus
(BP-9-7-17)

DEKRA Certified
ISO9001 Quality Management System

www.keysight.com/go/quality
Keysight Technologies, Inc.
DEKRA Certified ISO 9001:2015
Quality Management System

KEYSIGHT TECHNOLOGIES

This information is subject to change without notice.
© Keysight Technologies, 2017
Published in USA, December 2, 2017
5989-1330EN
www.keysight.com

Mouser Electronics

Authorized Distributor

Click to View Pricing, Inventory, Delivery & Lifecycle Information:

Keysight:
N5764A/861 N5766A/861 N5748A/903 N5770A/861 N5765A/861 N5744A/903 N5745A/903 N5751A/903 N5747A/903 N5767A/861 N5740A N5772A/861 N5746A/903 N6708A N6709C N5750A/903