THIS DRAWING AND DESIGN HEREON CONSTITUTES A PROPRIETARY DESIGN OF PACKARD ELECTRIC DIVISION AND IS NOT TO BE DUPLICATED OR REPRODUCED WITHOUT AUTHORITY OF PACKARD ELECTRIC DIVISION

DO NOT SCALE

PART NO 1212 4639

DATE	SYM	REVISION RECORD	AUTH	DR	CK
20N092	A	RELEASED	920005	JS	TM
11AU93	—	REVISED MAT'L SPEC	157104	FH	FH
22N094	B	REV LEVEL ADVANCED	163187	FH	FH

PACKARD ELECTRIC DIVISION
GENERAL MOTORS CORPORATION
WARREN, OHIO

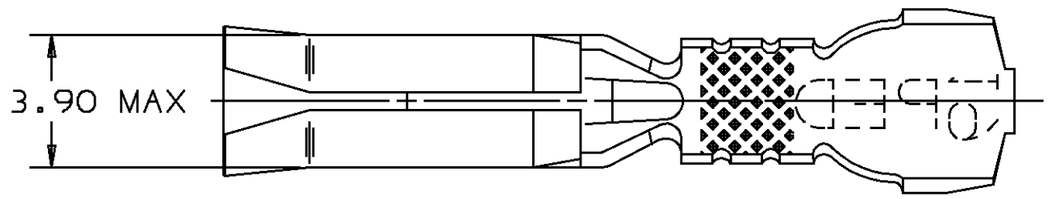

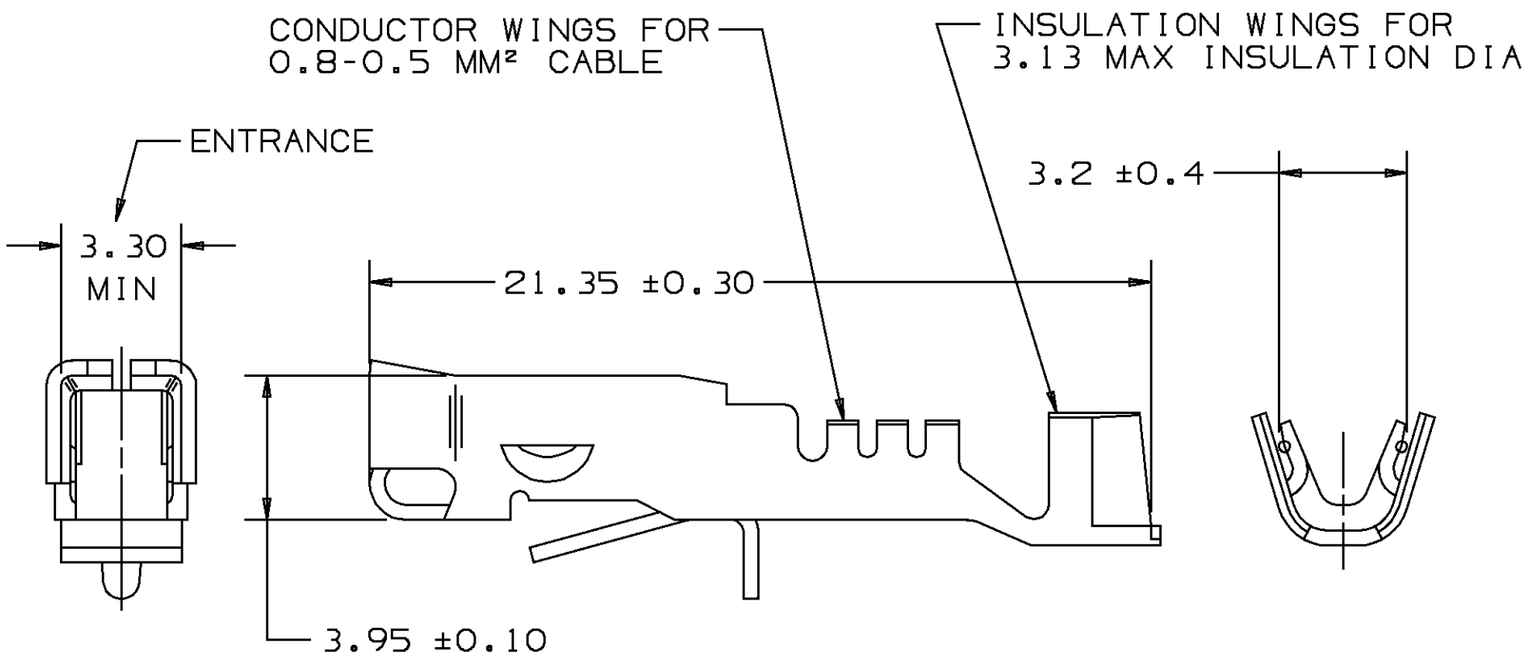

Unigraphics II

THIRD ANGLE PROJECTION

METRIC

DIMENSIONS ARE IN MILLIMETERS UNLESS OTHERWISE SPECIFIED

TOLERANCE UNLESS OTHERWISE SPECIFIED
DECIMAL: ANGULAR ± 2°
ONE PLACE ± 0.3
TWO PLACE ± 0.15

CODE NO 6900	QC
DWG DATE 20N092	DR JOE SUDIK 20N092
SCALE NONE	CK TOM MUDREY 14DE92
REFERENCE NO 12124697 SHT #4	APPR JAY SLUSS 15DE92
	APPR

MATERIAL SPEC
.406 THK TIN PLATED BeCu

NAME
TERM F M/P 280 P2S

PART NUMBER
1212 4639
OUTLINE DRAWING

SIZE A3