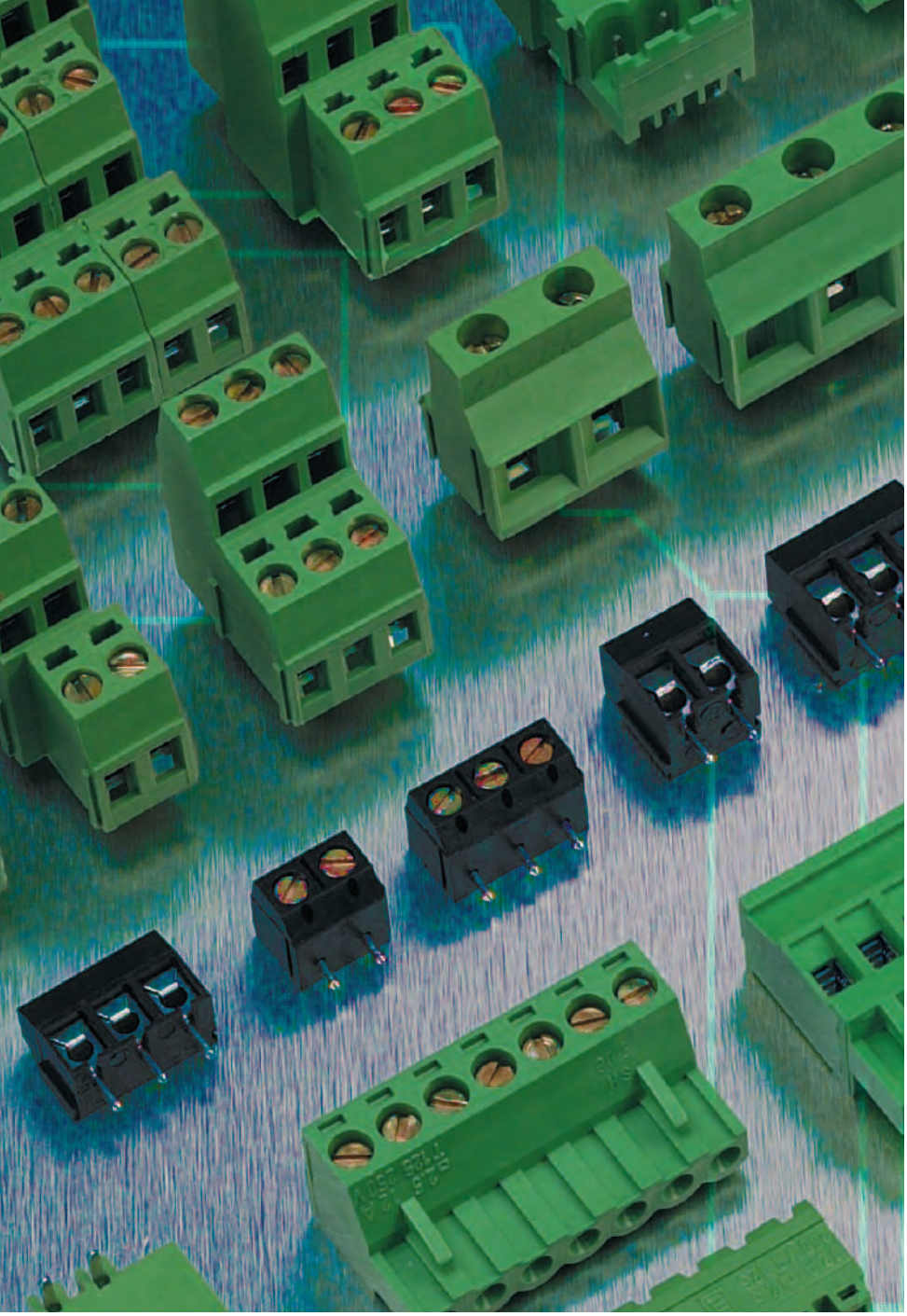

Altech is pleased to announce a new, more extensive printed circuit board terminal block line. This line offers the standard single and double level fixed and pluggable terminal blocks in metric and US pin spacings. However, this product line goes beyond our past standard offering. There is now a wider array of products within each pin spacing as well as new types of blocks such as 35°, reverse horizontal wire entry, and triple level fixed blocks, card edge connectors, panel feed through blocks, barrier strips, and plugs/headers with screw flanges. This product assortment combined with the new pricing structure makes this line extremely competitive.

Altech printed circuit board terminal blocks give you highly dependable connections without the need for wire lugs. Choose either tubular screw clamps or box clamps when economy is paramount or screw-cage clamps for heavy-duty applications. In each case, simply strip and insert the wire and tighten the screw. We recommend the use of ferrules, especially for export applications and whenever fine stranded wires must be terminated.

Our board mounted terminal blocks meet or exceed most international standards and are accepted worldwide. They're available in single, double and triple level configurations with both, millimeter and inch pin spacings. All leave mini footprints to save valuable real estate.

PRINTED CIRCUIT BOARD TERMINAL BLOCKS

Altech Corp.® • 35 Royal Road • Flemington, NJ 08822-6000 • Phone (908)806-9400 • FAX (908)806-9490 • www.altechcorp.com

Fixed

Our printed circuit board terminal blocks designed for fixed mounting offer high density, and maximum flexibility. Modular construction simplifies ordering and reduces inventory. Two-and 3-pole modules can be interlocked to create multipole assemblies. Altech can also supply ready-made assemblies tailored to your specification. Fixed-mount blocks are available with the economical tubular screw, box clamp or the screw-cage clamp and offer several wire entry options to facilitate wiring and increase accessibility.

Pluggable

The two-piece, plug and header design of our "pluggable" terminal blocks speed and simplify board replacement and reduce costly downtime and misconnections. No special tools are required. Headers are soldered into the board and accept the plugs, which are easily removed for fast, convenient board or device replacement. Choose single- mold designs for maximum strength. Or choose modular designs which are assembled from 2 and 3 pole modules when you need maximum flexibility to meet changing requirements. Both are available in a variety of configurations. Headers are available in vertical, and horizontal, single or double-level, with closed or open ends.

We offer pluggables with either screw-cage clamp termination for heavy duty requirements or with tubular screw termination and open headers for cost sensitive applications. We also offer a card edge connector for a quick, reliable and inexpensive connection.

Pin Spacing

Each clamp style is offered in metric and inch pin spacing. For your convenience, this catalog is organized by pin spacing. Fixed blocks are first, starting with the smallest pin spacing, then pluggable shown in each available spacing.

Connection

Altech's printed circuit board terminal blocks give you a choice between tubular screw, box clamp and screw-cage clamp designs:

- When your application calls for the highest reliability and frequent wire terminations, the screw-cage clamp should be your choice. As the clamp is tightened, the nickel-plated cage rises, pressing the wire firmly against the busbar, ensuring solid connections every time. Standard color is green.

- In the tubular screw and box clamp design, tightening the screw presses the conductor directly against the bottom of the clamp. These systems are ideal for cost sensitive, lighter duty applications or applications with infrequent wire terminations. Wire protectors are standard. Standard color is black for tubular screw and green for box clamp.

Materials

All of our printed circuit board terminal blocks feature precision formed or machined metal parts which are electrolytically plated. Nickel or tin-plated brass cage clamps or tubes, wire protectors, and tin-plated solder pins satisfy the most demanding requirements. Housings are precision-molded from self-extinguishing polyamid 6.8 or glass-filled polyester providing excellent strength and temperature resistance.

Marking

Altech offers marking to identify terminal inputs. Order Hot Stamp Imprinting for permanent marking of large quantities or custom marked terminals. Standard marking is consecutive numbers, left to right. This standard marking can be ordered by adding a suffix (i.e. MV-4612/iA would be a MV-4612 terminal block imprinted 1 through 12, left to right).

Custom imprints are also available, see page 177 for ordering information.

3.50 and 3.81mm Pin Spacing – Fixed PCB Blocks

Pin Spacing: 3.50mm
Orientation: Vertical
Clamp Type: Screw Cage
Design: Modular

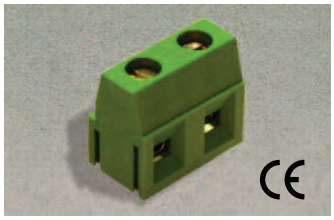

MVS-13xx(3.50)

ELECTRICAL

	Current	Voltage	Wire Range
c UL us E178356	10A①	300V	30-16 AWG
IEC	12A	130V	1.0mm² stranded 1.5mm² solid

INSTALLATION DATA

Screw Size	M2	**PCB Hole Size**	1.1mm
Torque	0.25Nm (2.2lbf-in)	**Stripping Lgth.**	6.7mm

MATERIAL

Body	Polyamide	**Screw**	Galvanized Steel
Flammability Class	UL94V-0	**Terminal**	Tin-Plated Brass
Temperature Limit	105°C UL 125°C IEC	**Clamp**	Nickeled Brass
Color	Green		

No. Poles	Cat. #	Length (mm)	Std. Pk.
2	MVS-132(3.50)	7.0	100
3	MVS-133(3.50)	10.5	100
4	MVS-134(3.50)	14.0	50
5	MVS-135(3.50)	17.5	50
6	MVS-136(3.50)	21.0	50
7	MVS-137(3.50)	24.5	50
8	MVS-138(3.50)	28.0	50
9	MVS-139(3.50)	31.5	50
10	MVS-1310(3.50)	35.0	50
11	MVS-1311(3.50)	38.5	50
12	MVS-1312(3.50)	42.0	50
13	MVS-1313(3.50)	45.5	20
14	MVS-1314(3.50)	49.0	20
15	MVS-1315(3.50)	52.5	20
16	MVS-1316(3.50)	56.0	20
17	MVS-1317(3.50)	59.5	20
18	MVS-1318(3.50)	63.0	20
19	MVS-1319(3.50)	66.5	20
20	MVS-1320(3.50)	70.0	20
21	MVS-1321(3.50)	73.5	20
22	MVS-1322(3.50)	77.0	20
23	MVS-1323(3.50)	80.5	20
24	MVS-1324(3.50)	84.0	20

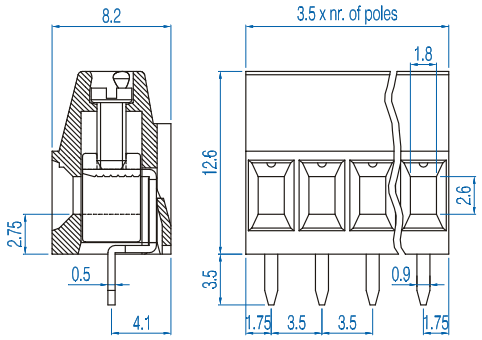

① 12A Factory Wiring - UL

Pin Spacing: 3.81mm
Orientation: Vertical
Clamp Type: Screw Cage
Design: Modular

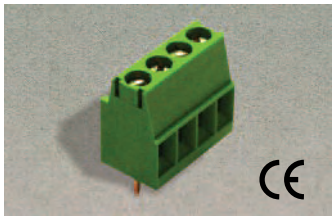

MVS-13xx

ELECTRICAL

	Current	Voltage	Wire Range
c UL us E178356	10A②	300V	30-16 AWG
IEC	12A	130V	1.0mm² stranded 1.5mm² solid

INSTALLATION DATA

Screw Size	M2	**PCB Hole Size**	1.1mm
Torque	0.25Nm (2.2lbf-in)	**Stripping Lgth.**	6.7mm

MATERIAL

Body	Polyamide	**Screw**	Galvanized Steel
Flammability Class	UL94V-0	**Terminal**	Tin-Plated Brass
Temperature Limit	105°C UL 125°C IEC	**Clamp**	Nickeled Brass
Color	Green		

No. Poles	Cat. #	Length (mm)	Std. Pk.
2	MVS-132	7.6	100
3	MVS-133	11.4	100
4	MVS-134	15.2	50
5	MVS-135	19.1	50
6	MVS-136	22.9	50
7	MVS-137	26.7	50
8	MVS-138	30.5	50
9	MVS-139	34.3	50
10	MVS-1310	38.1	50
11	MVS-1311	41.9	50
12	MVS-1312	45.7	50
13	MVS-1313	49.5	20
14	MVS-1314	53.3	20
15	MVS-1315	57.2	20
16	MVS-1316	61.0	20
17	MVS-1317	64.8	20
18	MVS-1318	68.6	20
19	MVS-1319	72.4	20
20	MVS-1320	76.2	20
21	MVS-1321	80.0	20
22	MVS-1322	83.8	20
23	MVS-1323	87.6	20
24	MVS-1324	91.4	20

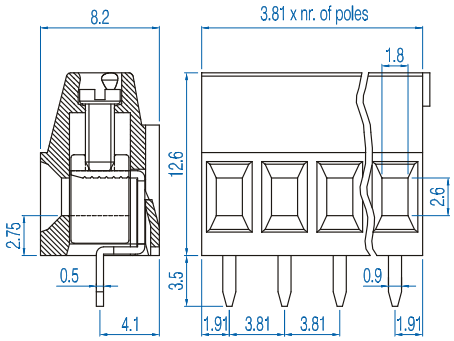

② 12A Factory Wiring - UL

Pin Spacing: 5.00mm
Orientation: Horizontal
Clamp Type: Tubular Screw with Wire Protector
Design: Modular

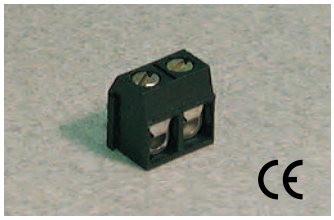

MHE-13xx

ELECTRICAL

	Current	Voltage	Wire Range
c UL us E178356	16A	250V	22-16AWG

INSTALLATION DATA

Screw Size	M2.6	**PCB Hole Size**	1.3mm
Torque	0.4Nm (3.6 lbf-in.)	**Stripping Lgth.**	5.6mm

MATERIAL

Body	Glass-Filled Polyester	**Screw**	Galvanized Steel
Flammability Class	UL94V-0	**Terminal**	Tin-Plated Brass
Temperature Limit	130˚C UL 125˚C IEC	**Wire Protector**	CuSn6
Color	Black		

No. Poles	Cat. #	Length (mm)	Std. Pk.
2	MHE-132	10.0	100
3	MHE-133	15.0	100
4	MHE-134	20.0	50
5	MHE-135	25.0	50
6	MHE-136	30.0	50
7	MHE-137	35.0	50
8	MHE-138	40.0	50
9	MHE-139	45.0	50
10	MHE-1310	50.0	50
11	MHE-1311	55.0	50
12	MHE-1312	60.0	50
13	MHE-1313	65.0	20
14	MHE-1314	70.0	20
15	MHE-1315	75.0	20
16	MHE-1316	80.0	20
17	MHE-1317	85.0	20
18	MHE-1318	90.0	20
19	MHE-1319	95.0	20
20	MHE-1320	100.0	20
21	MHE-1321	105.0	20
22	MHE-1322	110.0	20
23	MHE-1323	115.0	20
24	MHE-1324	120.0	20

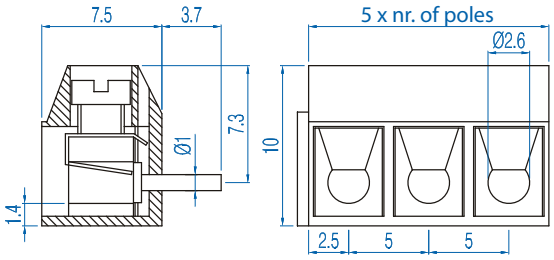

Pin Spacing: 5.00mm
Orientation: Horizontal
Clamp Type: Tubular Screw with Wire Protector
Design: Modular

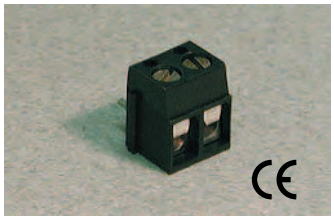

MHE-16xx

ELECTRICAL

	Current	Voltage	Wire Range
c UL us E178356	16A	250V	22-14AWG

INSTALLATION DATA

Screw Size	M3	**PCB Hole Size**	1.3mm
Torque	0.5Nm (4.5 lbf-in.)	**Stripping Lgth.**	5.8mm

MATERIAL

Body	Glass-Filled Polyester	**Screw**	Galvanized Steel
Flammability Class	UL94V-0	**Terminal**	Tin-Plated Brass
Temperature Limit	130˚C UL 125˚C IEC	**Wire Protector**	CuSn6
Color	Black		

No. Poles	Cat. #	Length (mm)	Std. Pk.
2	MHE-162	10.0	100
3	MHE-163	15.0	100
4	MHE-164	20.0	50
5	MHE-165	25.0	50
6	MHE-166	30.0	50
7	MHE-167	35.0	50
8	MHE-168	40.0	50
9	MHE-169	45.0	50
10	MHE-1610	50.0	50
11	MHE-1611	55.0	50
12	MHE-1612	60.0	50
13	MHE-1613	65.0	20
14	MHE-1614	70.0	20
15	MHE-1615	75.0	20
16	MHE-1616	80.0	20
17	MHE-1617	85.0	20
18	MHE-1618	90.0	20
19	MHE-1619	95.0	20
20	MHE-1620	100.0	20
21	MHE-1621	105.0	20
22	MHE-1622	110.0	20
23	MHE-1623	115.0	20
24	MHE-1624	120.0	20

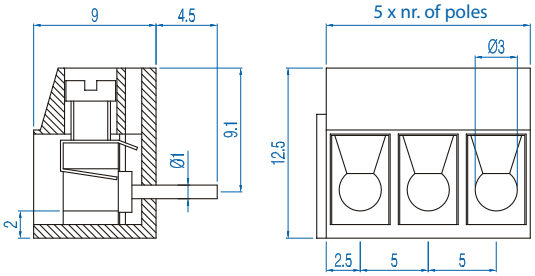

5.00mm Pin Spacing – Fixed PCB Blocks

Pin Spacing: 5.00mm
Orientation: Vertical
Clamp Type: Box with Wire Protector
Design: Modular

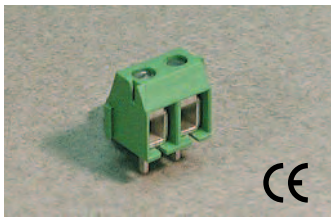

MBE-15xx

ELECTRICAL

	Current	Voltage	Wire Range
c UL us E178356	10A	300V	30-16AWG
IEC	17.5A	450V	1.5mm² Stranded 2.5mm² Solid

INSTALLATION DATA

Screw Size	M2.5	**PCB Hole Size**	1.5mm
Torque	0.4Nm (3.6 lbf-in.)	**Stripping Lgth.**	7.1mm

MATERIAL

Body	Polyamide	**Screw**	Galvanized Steel
Flammability Class	UL94V-0	**Terminal**	Tin-Plated Brass
Temperature Limit	105˚C UL 125˚C IEC	**Wire Protector**	Tin-Plated Bronze
Color	Green		

No. Poles	Cat. #	Length (mm)	Std. Pk.
2	MBE-152	10.0	100
3	MBE-153	15.0	100
4	MBE-154	20.0	50
5	MBE-155	25.0	50
6	MBE-156	30.0	50
7	MBE-157	35.0	50
8	MBE-158	40.0	50
9	MBE-159	45.0	50
10	MBE-1510	50.0	50
11	MBE-1511	55.0	50
12	MBE-1512	60.0	50
13	MBE-1513	65.0	20
14	MBE-1514	70.0	20
15	MBE-1515	75.0	20
16	MBE-1516	80.0	20
17	MBE-1517	85.0	20
18	MBE-1518	90.0	20
19	MBE-1519	95.0	20
20	MBE-1520	100.0	20
21	MBE-1521	105.0	20
22	MBE-1522	110.0	20
23	MBE-1523	115.0	20
24	MBE-1524	120.0	20

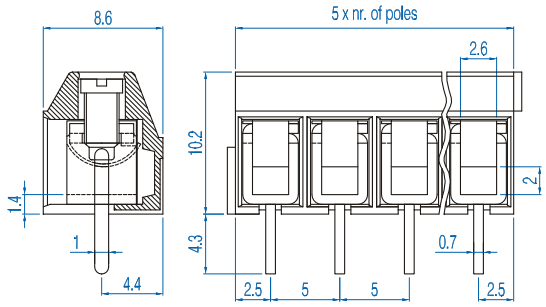

Pin Spacing: 5.00mm
Orientation: Vertical
Clamp Type: Screw Cage
Design: Modular

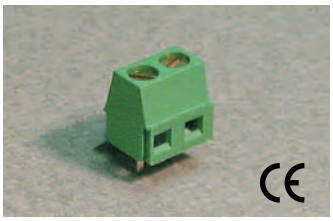

MV-15xx

ELECTRICAL

	Current	Voltage	Wire Range
c UL us E178356	10A	300V	30-16AWG
IEC	13.5A	250V	1.5mm² Stranded 2.5mm² Solid

INSTALLATION DATA

Screw Size	M3	**PCB Hole Size**	1.3mm
Torque	0.5Nm (4.5 lbf-in.)	**Stripping Lgth.**	6.7mm

MATERIAL

Body	Polyamide	**Screw**	Galvanized Steel
Flammability Class	UL94V-0	**Terminal**	Tin-Plated Brass
Temperature Limit	105˚C UL 125˚C IEC	**Clamp**	Nickeled Brass
Color	Green		

No. Poles	Cat. #	Length (mm)	Std. Pk.
2	MV-152	10.0	100
3	MV-153	15.0	100
4	MV-154	20.0	50
5	MV-155	25.0	50
6	MV-156	30.0	50
7	MV-157	35.0	50
8	MV-158	40.0	50
9	MV-159	45.0	50
10	MV-1510	50.0	50
11	MV-1511	55.0	50
12	MV-1512	60.0	50
13	MV-1513	65.0	20
14	MV-1514	70.0	20
15	MV-1515	75.0	20
16	MV-1516	80.0	20
17	MV-1517	85.0	20
18	MV-1518	90.0	20
19	MV-1519	95.0	20
20	MV-1520	100.0	20
21	MV-1521	105.0	20
22	MV-1522	110.0	20
23	MV-1523	115.0	20
24	MV-1524	120.0	20

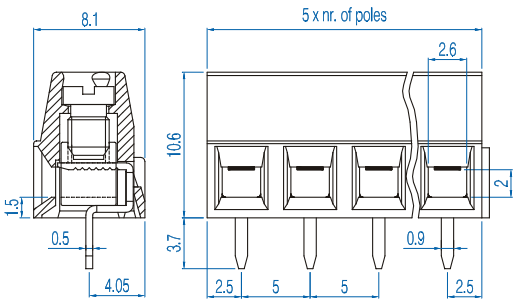

5.00mm Pin Spacing – Fixed PCB Blocks

Pin Spacing: 5.00mm
Orientation: Horizontal
Clamp Type: Screw Cage
Design: Modular

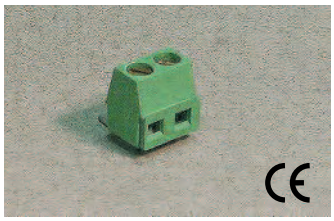

MH-15xx

ELECTRICAL

	Current	Voltage	Wire Range
c UL us E178356	10A	300V	30-16AWG
IEC	13.5A	250V	1.5mm² Stranded 2.5mm² Solid

INSTALLATION DATA

Screw Size	M3	**PCB Hole Size**	1.3mm
Torque	0.5Nm (4.5 lbf-in.)	**Stripping Lgth.**	6.7mm

MATERIAL

Body	Polyamide	**Screw**	Galvanized Steel
Flammability Class	UL94V-0	**Terminal**	Tin-Plated Brass
Temperature Limit	105˚C UL 125˚C IEC	**Clamp**	Nickeled Brass
Color	Green		

No. Poles	Cat. #	Length (mm)	Std. Pk.
2	MH-152	10.0	100
3	MH-153	15.0	100
4	MH-154	20.0	50
5	MH-155	25.0	50
6	MH-156	30.0	50
7	MH-157	35.0	50
8	MH-158	40.0	50
9	MH-159	45.0	50
10	MH-1510	50.0	50
11	MH-1511	55.0	50
12	MH-1512	60.0	50
13	MH-1513	65.0	20
14	MH-1514	70.0	20
15	MH-1515	75.0	20
16	MH-1516	80.0	20
17	MH-1517	85.0	20
18	MH-1518	90.0	20
19	MH-1519	95.0	20
20	MH-1520	100.0	20
21	MH-1521	105.0	20
22	MH-1522	110.0	20
23	MH-1523	115.0	20
24	MH-1524	120.0	20

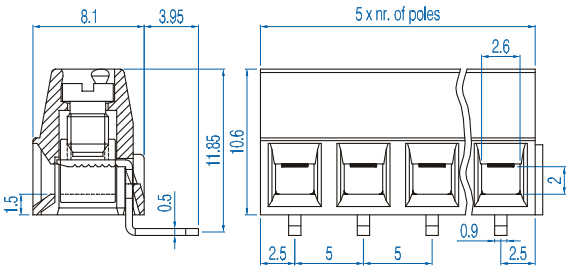

Pin Spacing: 5.00mm
Orientation: Vertical
Clamp Type: Screw Cage
Design: Modular

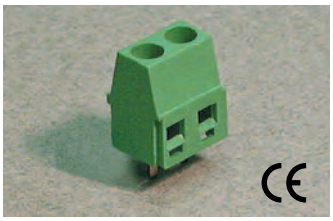

MVS-15xx

ELECTRICAL

	Current	Voltage	Wire Range
c UL us E178356	10A①	300V	30-16AWG
IEC	16A	250V	1.5mm² Stranded 2.5mm² Solid

INSTALLATION DATA

Screw Size	M3	**PCB Hole Size**	1.5mm
Torque	0.5Nm (4.5 lbf-in.)	**Stripping Lgth.**	6.9mm

MATERIAL

Body	Polyamide	**Screw**	Galvanized Steel
Flammability Class	UL94V-0	**Terminal**	Tin-Plated Brass
Temperature Limit	105˚C UL 125˚C IEC	**Clamp**	Nickeled Brass
Color	Green		

No. Poles	Cat. #	Length (mm)	Std. Pk.
2	MVS-152	10.0	100
3	MVS-153	15.0	100
4	MVS-154	20.0	50
5	MVS-155	25.0	50
6	MVS-156	30.0	50
7	MVS-157	35.0	50
8	MVS-158	40.0	50
9	MVS-159	45.0	50
10	MVS-1510	50.0	50
11	MVS-1511	55.0	50
12	MVS-1512	60.0	50
13	MVS-1513	65.0	20
14	MVS-1514	70.0	20
15	MVS-1515	75.0	20
16	MVS-1516	80.0	20
17	MVS-1517	85.0	20
18	MVS-1518	90.0	20
19	MVS-1519	95.0	20
20	MVS-1520	100.0	20
21	MVS-1521	105.0	20
22	MVS-1522	110.0	20
23	MVS-1523	115.0	20
24	MVS-1524	120.0	20

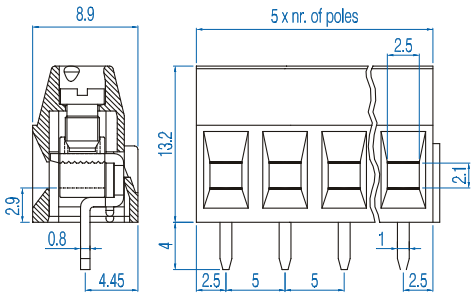

①13.5A Factory Wiring - UL

5.00mm Pin Spacing – Fixed PCB Blocks

Pin Spacing: 5.00mm
Orientation: Vertical
Clamp Type: Box with Wire Protector
Design: Modular

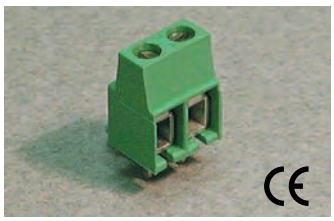

MVE-15xx

ELECTRICAL

	Current	Voltage	Wire Range
c UL us E178356	10A	300V	30-16AWG
IEC	17.5A	450V	1.5mm² Stranded 2.5mm² Solid

INSTALLATION DATA

Screw Size	M2.5	**PCB Hole Size**	1.5mm
Torque	0.4Nm (3.6 lbf-in.)	**Stripping Lgth.**	6.8mm

MATERIAL

Body	Polyamide	**Screw**	Galvanized Steel
Flammability Class	UL94V-0	**Terminal**	Tin-Plated Brass
Temperature Limit	105˚C UL 125˚C IEC	**Wire Protector**	Tin-Plated Bronze
Color	Green		

No. Poles	Cat. #	Length (mm)	Std. Pk.
2	MVE-152	10.0	100
3	MVE-153	15.0	100
4	MVE-154	20.0	50
5	MVE-155	25.0	50
6	MVE-156	30.0	50
7	MVE-157	35.0	50
8	MVE-158	40.0	50
9	MVE-159	45.0	50
10	MVE-1510	50.0	50
11	MVE-1511	55.0	50
12	MVE-1512	60.0	50
13	MVE-1513	65.0	20
14	MVE-1514	70.0	20
15	MVE-1515	75.0	20
16	MVE-1516	80.0	20
17	MVE-1517	85.0	20
18	MVE-1518	90.0	20
19	MVE-1519	95.0	20
20	MVE-1520	100.0	20
21	MVE-1521	105.0	20
22	MVE-1522	110.0	20
23	MVE-1523	115.0	20
24	MVE-1524	120.0	20

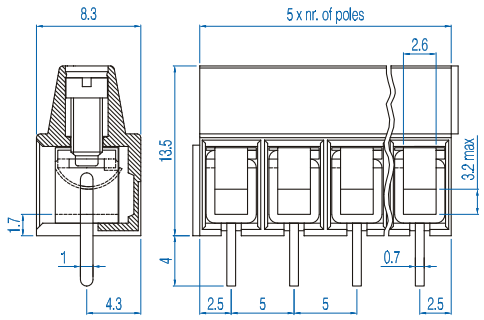

Pin Spacing: 5.00mm
Orientation: Vertical
Clamp Type: Screw Cage
Design: Modular

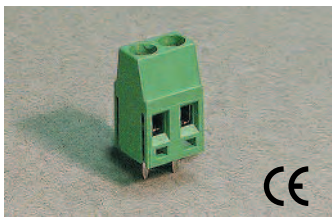

MVE-25xx

ELECTRICAL

	Current	Voltage	Wire Range
c UL us E178356	15A①	300V	30-14AWG
IEC	16A	450V	2.5mm² Stranded 4.0mm² Solid

INSTALLATION DATA

Screw Size	M3	**PCB Hole Size**	1.3mm
Torque	0.5Nm (4.5 lbf-in.)	**Stripping Lgth.**	7.1mm

MATERIAL

Body	Polyamide	**Screw**	Galvanized Steel
Flammability Class	UL94V-0	**Terminal**	Tin-Plated Brass
Temperature Limit	105˚C UL 125˚C IEC	**Clamp**	Nickeled Brass
Color	Green		

No. Poles	Cat. #	Length (mm)	Std. Pk.
2	MVE-252	10.0	100
3	MVE-253	15.0	100
4	MVE-254	20.0	50
5	MVE-255	25.0	50
6	MVE-256	30.0	50
7	MVE-257	35.0	50
8	MVE-258	40.0	50
9	MVE-259	45.0	50
10	MVE-2510	50.0	50
11	MVE-2511	55.0	50
12	MVE-2512	60.0	50
13	MVE-2513	65.0	20
14	MVE-2514	70.0	20
15	MVE-2515	75.0	20
16	MVE-2516	80.0	20
17	MVE-2517	85.0	20
18	MVE-2518	90.0	20
19	MVE-2519	95.0	20
20	MVE-2520	100.0	20
21	MVE-2521	105.0	20
22	MVE-2522	110.0	20
23	MVE-2523	115.0	20
24	MVE-2524	120.0	20

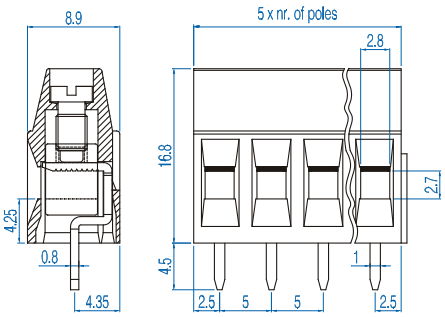

① 16A Factory Wiring - UL

Altech Corp.® • 35 Royal Road • Flemington, NJ 08822-6000 • Phone (908)806-9400 • FAX (908)806-9490 • www.altechcorp.com

Pin Spacing: 5.00mm
Orientation: Horizontal
Clamp Type: Screw Cage
Design: Modular

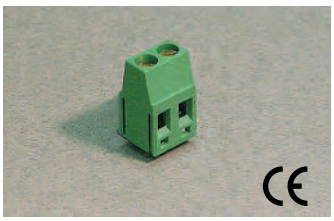

MHE-25xx

ELECTRICAL

	Current	Voltage	Wire Range
c UL us E178356	15A①	300V	30-14AWG
IEC	16A	450V	2.5mm² Stranded 4.0mm² Solid

INSTALLATION DATA

Screw Size	M3	**PCB Hole Size**	1.3mm
Torque	0.5Nm (4.5 lbf-in.)	**Stripping Lgth.**	7.1mm

MATERIAL

Body	Polyamide	**Screw**	Galvanized Steel
Flammability Class	UL94V-0	**Terminal**	Tin-Plated Brass
Temperature Limit	105˚C UL 125˚C IEC	**Clamp**	Nickeled Brass
Color	Green		

No. Poles	Cat. #	Length (mm)	Std. Pk.
2	MHE-252	10.0	100
3	MHE-253	15.0	100
4	MHE-254	20.0	50
5	MHE-255	25.0	50
6	MHE-256	30.0	50
7	MHE-257	35.0	50
8	MHE-258	40.0	50
9	MHE-259	45.0	50
10	MHE-2510	50.0	50
11	MHE-2511	55.0	50
12	MHE-2512	60.0	50
13	MHE-2513	65.0	20
14	MHE-2514	70.0	20
15	MHE-2515	75.0	20
16	MHE-2516	80.0	20
17	MHE-2517	85.0	20
18	MHE-2518	90.0	20
19	MHE-2519	95.0	20
20	MHE-2520	100.0	20
21	MHE-2521	105.0	20
22	MHE-2522	110.0	20
23	MHE-2523	115.0	20
24	MHE-2524	120.0	20

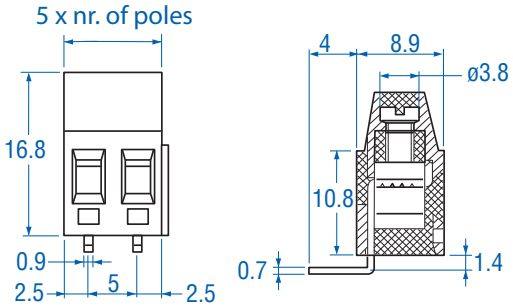

① 16A Factory Wiring - UL

Pin Spacing: 5.00mm
Orientation: Reverse Horizontal
Clamp Type: Screw Cage
Design: Modular

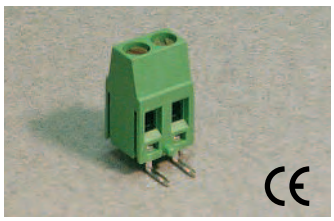

MHR-25xx

ELECTRICAL

	Current	Voltage	Wire Range
c UL us E178356	15A②	300V	30-14AWG
IEC	16A	250V	2.5mm² Stranded 4.0mm² Solid

INSTALLATION DATA

Screw Size	M3	**PCB Hole Size**	1.3mm
Torque	0.5Nm (4.5 lbf-in.)	**Stripping Lgth.**	7.1mm

MATERIAL

Body	Polyamide	**Screw**	Galvanized Steel
Flammability Class	UL94V-0	**Terminal**	Tin-Plated Brass
Temperature Limit	105˚C UL 125˚C IEC	**Clamp**	Nickeled Brass
Color	Green		

No. Poles	Cat. #	Length (mm)	Std. Pk.
2	MHR-252	10.0	100
3	MHR-253	15.0	100
4	MHR-254	20.0	50
5	MHR-255	25.0	50
6	MHR-256	30.0	50
7	MHR-257	35.0	50
8	MHR-258	40.0	50
9	MHR-259	45.0	50
10	MHR-2510	50.0	50
11	MHR-2511	55.0	50
12	MHR-2512	60.0	50
13	MHR-2513	65.0	20
14	MHR-2514	70.0	20
15	MHR-2515	75.0	20
16	MHR-2516	80.0	20
17	MHR-2517	85.0	20
18	MHR-2518	90.0	20
19	MHR-2519	95.0	20
20	MHR-2520	100.0	20
21	MHR-2521	105.0	20
22	MHR-2522	110.0	20
23	MHR-2523	115.0	20
24	MHR-2524	120.0	20

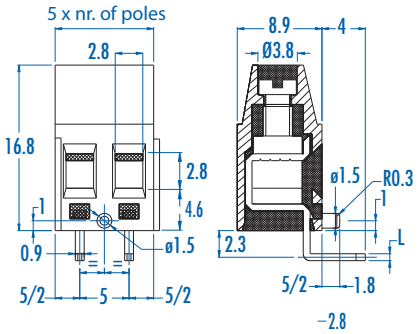

② 16A Factory Wiring - UL

5.00mm Pin Spacing – Fixed PCB Blocks

Pin Spacing: 5.00mm
Orientation: 35°
Clamp Type: Screw Cage
Design: Modular

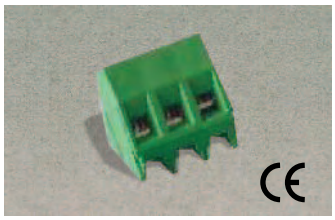

MVS-15xx (35)

ELECTRICAL

	Current	Voltage	Wire Range
c UL us E178356	10A①	300V	30-16 AWG
IEC	17.5A	450V	1.5mm² stranded 2.5mm² solid

INSTALLATION DATA

Screw Size	M3	**PCB Hole Size**	1.5mm
Torque	0.5Nm (4.5lbf-in)	**Stripping Lgth.**	6.9mm

MATERIAL

Body	Polyamide	**Screw**	Galvanized Steel
Flammability Class	UL94V-0	**Terminal**	Tin-Plated Brass
Temperature Limit	105°C UL 125°C IEC	**Clamp**	Nickeled Brass
Color	Green		

No. Poles	Cat. #	Length (mm)	Std. Pk.
2	MVS-152(35)	10.0	100
3	MVS-153(35)	15.0	100
4	MVS-154(35)	20.0	50
5	MVS-155(35)	25.0	50
6	MVS-156(35)	30.0	50
7	MVS-157(35)	35.0	50
8	MVS-158(35)	40.0	50
9	MVS-159(35)	45.0	50
10	MVS-1510(35)	50.0	50
11	MVS-1511(35)	55.0	50
12	MVS-1512(35)	60.0	50
13	MVS-1513(35)	65.0	20
14	MVS-1514(35)	70.0	20
15	MVS-1515(35)	75.0	20
16	MVS-1516(35)	80.0	20
17	MVS-1517(35)	85.0	20
18	MVS-1518(35)	90.0	20
19	MVS-1519(35)	95.0	20
20	MVS-1520(35)	100.0	20
21	MVS-1521(35)	105.0	20
22	MVS-1522(35)	110.0	20
23	MVS-1523(35)	115.0	20
24	MVS-1524(35)	120.0	20

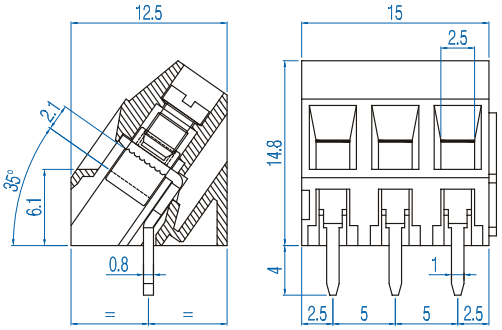

① 17.5A Factory Wiring - UL

Pin Spacing: 5.00mm
Orientation: 45°
Clamp Type: Screw Cage
Design: Modular

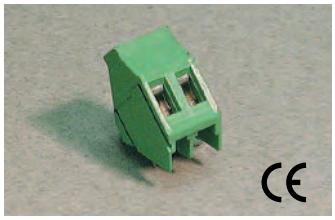

MI-25xx (5.00)

ELECTRICAL

	Current	Voltage	Wire Range
c UL us E178356	15A②	300V	30-14AWG
IEC	16A	450V	2.5mm² Stranded 4.0mm² Solid

INSTALLATION DATA

Screw Size	M3	**PCB Hole Size**	1.3mm
Torque	0.5Nm (4.5 lbf-in.)	**Stripping Lgth.**	8.3mm

MATERIAL

Body	Polyamide	**Screw**	Galvanized Steel
Flammability Class	UL94V-0	**Terminal**	Tin-Plated Brass
Temperature Limit	105˚C UL 125˚C IEC	**Clamp**	Nickeled Brass
Color	Green		

No. Poles	Cat. #	Length (mm)	Std. Pk.
2	MI-252 (5.00)	10.0	100
3	MI-253 (5.00)	15.0	100
4	MI-254 (5.00)	20.0	50
5	MI-255 (5.00)	25.0	50
6	MI-256 (5.00)	30.0	50
7	MI-257 (5.00)	35.0	50
8	MI-258 (5.00)	40.0	50
9	MI-259 (5.00)	45.0	50
10	MI-2510 (5.00)	50.0	50
11	MI-2511 (5.00)	55.0	50
12	MI-2512 (5.00)	60.0	50
13	MI-2513 (5.00)	65.0	20
14	MI-2514 (5.00)	70.0	20
15	MI-2515 (5.00)	75.0	20
16	MI-2516 (5.00)	80.0	20
17	MI-2517 (5.00)	85.0	20
18	MI-2518 (5.00)	90.0	20
19	MI-2519 (5.00)	95.0	20
20	MI-2520 (5.00)	100.0	20
21	MI-2521 (5.00)	105.0	20
22	MI-2522 (5.00)	110.0	20
23	MI-2523 (5.00)	115.0	20
24	MI-2524 (5.00)	120.0	20

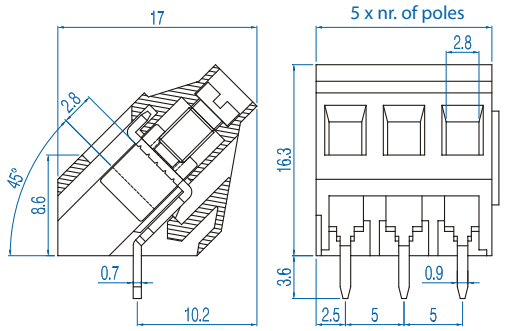

② 16A Factory Wiring - UL

Pin Spacing: 5.00mm
Orientation: Vertical - Double Level
Clamp Type: Screw Cage
Design: Modular - Offset

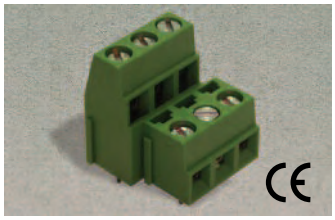

MVD-15xx(5.00)

ELECTRICAL

	Current	Voltage	Wire Range
c UL us E178356	10A②	300V	30-16AWG
IEC	13.5A	250V	1.5mm² Stranded 1.5mm² Solid

INSTALLATION DATA

Screw Size	M3	**PCB Hole Size**	1.3mm
Torque	0.5Nm (4.5lbf-in)	**Stripping Lgth.**	6.7mm

MATERIAL

Body	Polyamide	**Screw**	Galvanized Steel
Flammability Class	UL94V-0	**Terminal**	Tin-Plated Brass
Temperature Limit	105°C UL 125°C IEC	**Clamp**	Nickeled Brass
Color	Green		

No. Poles	Cat. #	Length (mm)	Std. Pk.
4	MVD-152(5.00)	12.5	100
6	MVD-153(5.00)	17.5	100
8	MVD-154(5.00)	22.5	50
10	MVD-155(5.00)	27.5	50
12	MVD-156(5.00)	32.5	50
14	MVD-157(5.00)	37.5	50
16	MVD-158(5.00)	42.5	50
18	MVD-159(5.00)	47.5	50
20	MVD-1510(5.00)	52.5	50
22	MVD-1511(5.00)	57.5	20
24	MVD-1512(5.00)	62.5	20
26	MVD-1513(5.00)	67.5	20
28	MVD-1514(5.00)	72.5	20
30	MVD-1515(5.00)	77.5	20
32	MVD-1516(5.00)	82.5	20
34	MVD-1517(5.00)	87.5	20
36	MVD-1518(5.00)	92.5	20
38	MVD-1519(5.00)	97.5	20
40	MVD-1520(5.00)	102.5	10
42	MVD-1521(5.00)	107.5	10
44	MVD-1522(5.00)	112.5	10
46	MVD-1523(5.00)	117.5	10
48	MVD-1524(5.00)	122.5	10

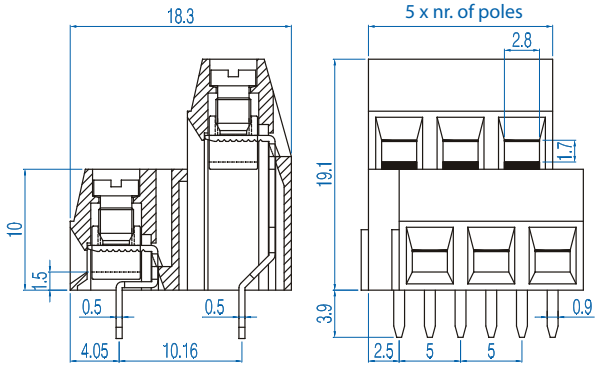

①13.5A Factory Wiring - UL

5.08mm Pin Spacing – Fixed PCB Blocks

Pin Spacing: 5.08mm
Orientation: Vertical
Clamp Type: Box with Wire Protector
Design: Modular

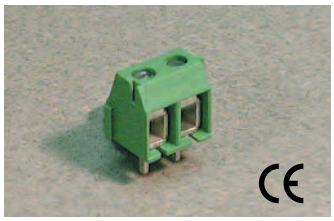

MBES-15xx

ELECTRICAL

	Current	Voltage	Wire Range
c UL us E178356	10A①	300V	30-16AWG
IEC	17.5A	250V	1.5mm² Stranded 2.5mm² Solid

INSTALLATION DATA

Screw Size	M2.5	**PCB Hole Size**	1.5mm
Torque	0.4Nm (3.6 lbf-in.)	**Stripping Lgth.**	6.7mm

MATERIAL

Body	Polyamide	**Screw**	Galvanized Steel
Flammability Class	UL94V-0	**Terminal**	Tin-Plated Brass
Temperature Limit	105˚C UL 125˚C IEC	**Wire Protector**	Tin-Plated Bronze
Color	Green		

No. Poles	Cat. #	Length (mm)	Std. Pk.
2	MBES-152	10.2	100
3	MBES-153	15.2	100
4	MBES-154	20.3	50
5	MBES-155	25.4	50
6	MBES-156	30.5	50
7	MBES-157	35.6	50
8	MBES-158	40.6	50
9	MBES-159	45.7	50
10	MBES-1510	50.8	50
11	MBES-1511	55.9	50
12	MBES-1512	61.0	50
13	MBES-1513	66.0	20
14	MBES-1514	71.1	20
15	MBES-1515	76.2	20
16	MBES-1516	81.3	20
17	MBES-1517	86.4	20
18	MBES-1518	91.4	20
19	MBES-1519	96.5	20
20	MBES-1520	101.6	20
21	MBES-1521	106.7	20
22	MBES-1522	111.8	20
23	MBES-1523	116.8	20
24	MBES-1524	121.9	20

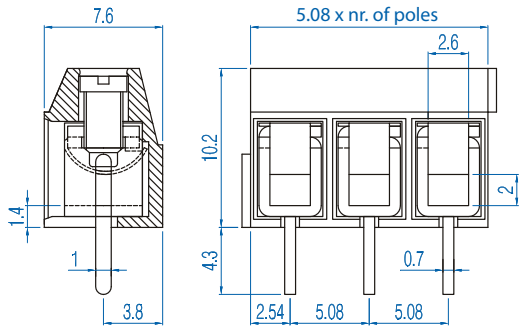

① 17.5A Factory Wiring - UL

Pin Spacing: 5.08mm
Orientation: Vertical
Clamp Type: Screw Cage
Design: Modular

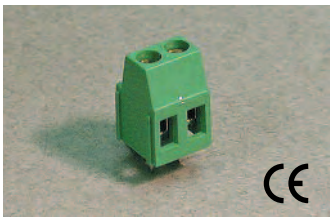

MV-25xx

ELECTRICAL

	Current	Voltage	Wire Range
c UL us E178356	15A②	300V	30-14AWG
IEC	16A	450V	2.5mm² Stranded 4.0mm² Solid

INSTALLATION DATA

Screw Size	M3	**PCB Hole Size**	1.3mm
Torque	0.5Nm (4.5 lbf-in.)	**Stripping Lgth.**	8.3mm

MATERIAL

Body	Polyamide	**Screw**	Galvanized Steel
Flammability Class	UL94V-0	**Terminal**	Tin-Plated Brass
Temperature Limit	105˚C UL 125˚C IEC	**Clamp**	Nickeled Brass
Color	Green		

No. Poles	Cat. #	Length (mm)	Std. Pk.
2	MV-252	10.2	100
3	MV-253	15.2	100
4	MV-254	20.3	50
5	MV-255	25.4	50
6	MV-256	30.5	50
7	MV-257	35.6	50
8	MV-258	40.6	50
9	MV-259	45.7	50
10	MV-2510	50.8	50
11	MV-2511	55.9	50
12	MV-2512	61.0	50
13	MV-2513	66.0	20
14	MV-2514	71.1	20
15	MV-2515	76.2	20
16	MV-2516	81.3	20
17	MV-2517	86.4	20
18	MV-2518	91.4	20
19	MV-2519	96.5	20
20	MV-2520	101.6	20
21	MV-2521	106.7	20
22	MV-2522	111.8	20
23	MV-2523	116.8	20
24	MV-2524	121.9	20

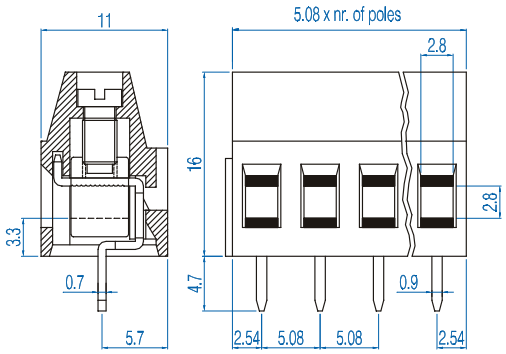

② 16A Factory Wiring - UL

5.08mm Pin Spacing – Fixed PCB Blocks

Pin Spacing: 5.08mm
Orientation: Horizontal
Clamp Type: Screw Cage
Design: Modular

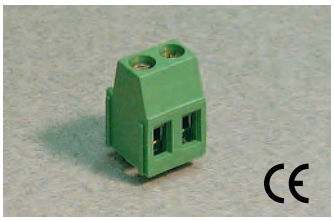

MH-25xx

ELECTRICAL

	Current	Voltage	Wire Range
c UL us E178356	15A①	300V	30-14AWG
IEC	16A	450V	2.5mm² Stranded 4.0mm² Solid

INSTALLATION DATA

Screw Size	M3	**PCB Hole Size**	1.3mm
Torque	0.5Nm (4.5 lbf-in.)	**Stripping Lgth.**	8.3mm

MATERIAL

Body	Polyamide	**Screw**	Galvanized Steel
Flammability Class	UL94V-0	**Terminal**	Tin-Plated Brass
Temperature Limit	105˚C UL 125˚C IEC	**Clamp**	Nickeled Brass
Color	Green		

No. Poles	Cat. #	Length (mm)	Std. Pk.
2	MH-252	10.2	100
3	MH-253	15.2	100
4	MH-254	20.3	50
5	MH-255	25.4	50
6	MH-256	30.5	50
7	MH-257	35.6	50
8	MH-258	40.6	50
9	MH-259	45.7	50
10	MH-2510	50.8	50
11	MH-2511	55.9	50
12	MH-2512	61.0	50
13	MH-2513	66.0	20
14	MH-2514	71.1	20
15	MH-2515	76.2	20
16	MH-2516	81.3	20
17	MH-2517	86.4	20
18	MH-2518	91.4	20
19	MH-2519	96.5	20
20	MH-2520	101.6	20
21	MH-2521	106.7	20
22	MH-2522	111.8	20
23	MH-2523	116.8	20
24	MH-2524	121.9	20

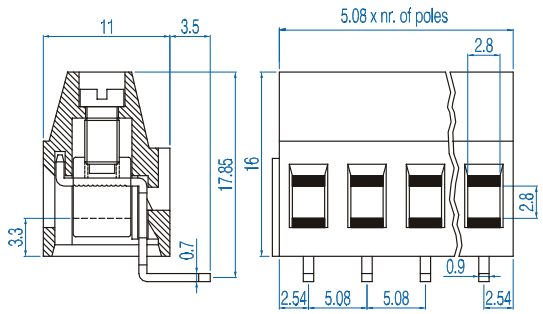

①16A Factory Wiring - UL

Pin Spacing: 5.08mm
Orientation: Vertical
Clamp Type: Screw Cage
Design: Modular

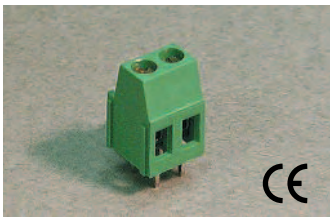

MV-25xx-D

ELECTRICAL

	Current	Voltage	Wire Range
c UL us E178356	15A②	300V	30-14AWG
IEC	24A	450V	2.5mm² Stranded 4.0mm² Solid

INSTALLATION DATA

Screw Size	M3	**PCB Hole Size**	1.3mm
Torque	0.5Nm (4.5 lbf-in.)	**Stripping Lgth.**	8.3mm

MATERIAL

Body	Polyamide	**Screw**	Galvanized Steel
Flammability Class	UL94V-0	**Terminal**	Tin-Plated Brass
Temperature Limit	105˚C UL 125˚C IEC	**Clamp**	Nickeled Brass
Color	Green		

No. Poles	Cat. #	Length (mm)	Std. Pk.
2	MV-252-D	10.2	100
3	MV-253-D	15.2	100
4	MV-254-D	20.3	50
5	MV-255-D	25.4	50
6	MV-256-D	30.5	50
7	MV-257-D	35.6	50
8	MV-258-D	40.6	50
9	MV-259-D	45.7	50
10	MV-2510-D	50.8	50
11	MV-2511-D	55.9	50
12	MV-2512-D	61.0	50
13	MV-2513-D	66.0	20
14	MV-2514-D	71.1	20
15	MV-2515-D	76.2	20
16	MV-2516-D	81.3	20
17	MV-2517-D	86.4	20
18	MV-2518-D	91.4	20
19	MV-2519-D	96.5	20
20	MV-2520-D	101.6	20
21	MV-2521-D	106.7	20
22	MV-2522-D	111.8	20
23	MV-2523-D	116.8	20
24	MV-2524-D	121.9	20

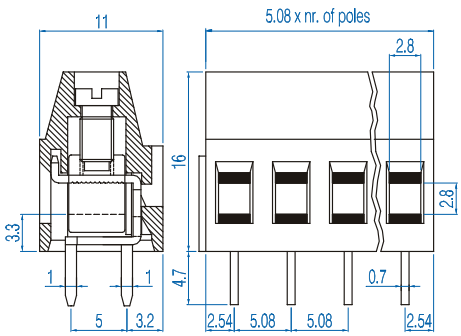

②16A Factory Wiring - UL

5.08mm Pin Spacing – Fixed PCB Blocks

Pin Spacing: 5.08mm*
Orientation: Vertical
Clamp Type: Screw Cage
Design: Modular

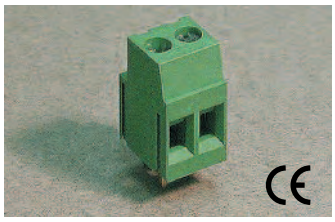

MVSP-25xx

ELECTRICAL

	Current	Voltage	Wire Range
c UL us E178356	15A①	300V	30-14AWG
IEC	24A	450V	2.5mm² Stranded 4.0mm² Solid

INSTALLATION DATA

Screw Size	M3	**PCB Hole Size**	1.5mm
Torque	0.5Nm (4.5 lbf-in.)	**Stripping Lgth.**	9.5mm

MATERIAL

Body	Polyamide	**Screw**	Galvanized Steel
Flammability Class	UL94V-0	**Terminal**	Tin-Plated Brass
Temperature Limit	105˚C UL 125˚C IEC	**Clamp**	Nickeled Brass
Color	Green		

No. Poles	Cat. #	Length (mm)	Std. Pk.
2	MVSP-252	10.2	100
3	MVSP-253	15.2	100
4	MVSP-254	20.3	50
5	MVSP-255	25.4	50
6	MVSP-256	30.5	50
7	MVSP-257	35.6	50
8	MVSP-258	40.6	50
9	MVSP-259	45.7	50
10	MVSP-2510	50.8	50
11	MVSP-2511	55.9	50
12	MVSP-2512	61.0	50
13	MVSP-2513	66.0	20
14	MVSP-2514	71.1	20
15	MVSP-2515	76.2	20
16	MVSP-2516	81.3	20
17	MVSP-2517	86.4	20
18	MVSP-2518	91.4	20
19	MVSP-2519	96.5	20
20	MVSP-2520	101.6	20
21	MVSP-2521	106.7	20
22	MVSP-2522	111.8	20
23	MVSP-2523	116.8	20
24	MVSP-2524	121.9	20

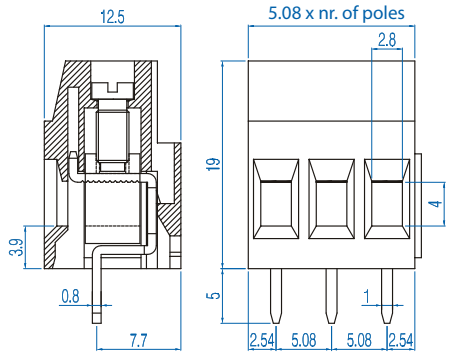

① 18A Factory Wiring - UL * Also available in 10.16mm pin spacing.

Pin Spacing: 5.08mm*
Orientation: Horizontal
Clamp Type: Screw Cage
Design: Modular

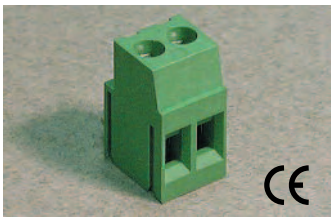

MHSP-25xx

ELECTRICAL

	Current	Voltage	Wire Range
c UL us E178356	15A②	300V	30-14AWG
IEC	24A	450V	2.5mm² Stranded 4.0mm² Solid

INSTALLATION DATA

Screw Size	M3	**PCB Hole Size**	1.5mm
Torque	0.5Nm (4.5 lbf-in.)	**Stripping Lgth.**	9.5mm

MATERIAL

Body	Polyamide	**Screw**	Galvanized Steel
Flammability Class	UL94V-0	**Terminal**	Tin-Plated Brass
Temperature Limit	105˚C UL 125˚C IEC	**Clamp**	Nickeled Brass
Color	Green		

No. Poles	Cat. #	Length (mm)	Std. Pk.
2	MHSP-252	10.2	100
3	MHSP-253	15.2	100
4	MHSP-254	20.3	50
5	MHSP-255	25.4	50
6	MHSP-256	30.5	50
7	MHSP-257	35.6	50
8	MHSP-258	40.6	50
9	MHSP-259	45.7	50
10	MHSP-2510	50.8	50
11	MHSP-2511	55.9	50
12	MHSP-2512	61.0	50
13	MHSP-2513	66.0	20
14	MHSP-2514	71.1	20
15	MHSP-2515	76.2	20
16	MHSP-2516	81.3	20
17	MHSP-2517	86.4	20
18	MHSP-2518	91.4	20
19	MHSP-2519	96.5	20
20	MHSP-2520	101.6	20
21	MHSP-2521	106.7	20
22	MHSP-2522	111.8	20
23	MHSP-2523	116.8	20
24	MHSP-2524	121.9	20

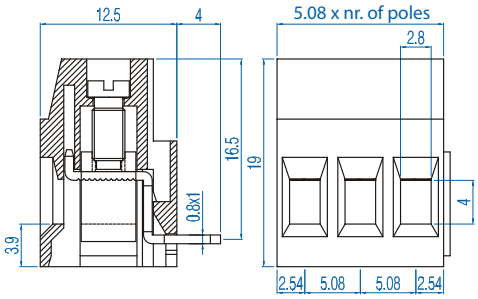

② 18A Factory Wiring - UL * Also available in 10.16mm pin spacing.

Pin Spacing: 5.08mm
Orientation: 35˚
Clamp Type: Screw Cage
Design: Modular

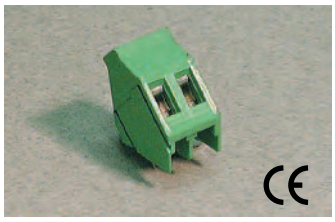

MI-25xx (35)

ELECTRICAL

	Current	Voltage	Wire Range
c UL us E178356	15A①	300V	30-14AWG
IEC	16A	450V	2.5mm² Stranded 4.0mm² Solid

INSTALLATION DATA

Screw Size	M3	**PCB Hole Size**	1.3mm
Torque	0.5Nm (4.5 lbf-in.)	**Stripping Lgth.**	8.3mm

MATERIAL

Body	Polyamide	**Screw**	Galvanized Steel
Flammability Class	UL94V-0	**Terminal**	Tin-Plated Brass
Temperature Limit	105˚C UL 125˚C IEC	**Clamp**	Nickeled Brass
Color	Green		

No. Poles	Cat. #	Length (mm)	Std. Pk.
2	MI-252 (35)	10.2	100
3	MI-253 (35)	15.2	100
4	MI-254 (35)	20.3	50
5	MI-255 (35)	25.4	50
6	MI-256 (35)	30.5	50
7	MI-257 (35)	35.6	50
8	MI-258 (35)	40.6	50
9	MI-259 (35)	45.7	50
10	MI-2510 (35)	50.8	50
11	MI-2511 (35)	55.9	50
12	MI-2512 (35)	61.0	50
13	MI-2513 (35)	66.0	20
14	MI-2514 (35)	71.1	20
15	MI-2515 (35)	76.2	20
16	MI-2516 (35)	81.3	20
17	MI-2517 (35)	86.4	20
18	MI-2518 (35)	91.4	20
19	MI-2519 (35)	96.5	20
20	MI-2520 (35)	101.6	20
21	MI-2521 (35)	106.7	20
22	MI-2522 (35)	111.8	20
23	MI-2523 (35)	116.8	20
24	MI-2524 (35)	121.9	20

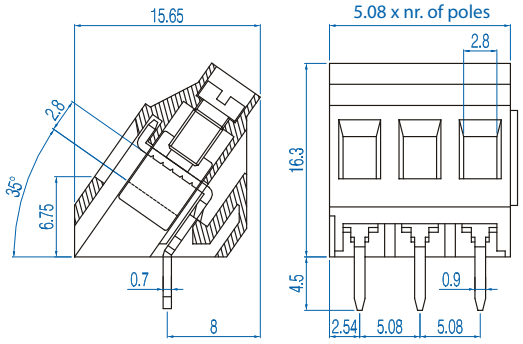

①16A Factory Wiring - UL

Pin Spacing: 5.08mm
Orientation: 45˚
Clamp Type: Screw Cage
Design: Modular

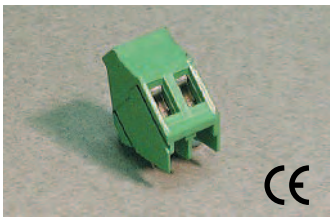

MI-25xx (45)

ELECTRICAL

	Current	Voltage	Wire Range
c UL us E178356	15A①	300V	30-14AWG
IEC	16A	450V	2.5mm² Stranded 4.0mm² Solid

INSTALLATION DATA

Screw Size	M3	**PCB Hole Size**	1.3mm
Torque	0.5Nm (4.5 lbf-in.)	**Stripping Lgth.**	8.3mm

MATERIAL

Body	Polyamide	**Screw**	Galvanized Steel
Flammability Class	UL94V-0	**Terminal**	Tin-Plated Brass
Temperature Limit	105˚C UL 125˚C IEC	**Clamp**	Nickeled Brass
Color	Green		

No. Poles	Cat. #	Length (mm)	Std. Pk.
2	MI-252 (45)	10.2	100
3	MI-253 (45)	15.2	100
4	MI-254 (45)	20.3	50
5	MI-255 (45)	25.4	50
6	MI-256 (45)	30.5	50
7	MI-257 (45)	35.6	50
8	MI-258 (45)	40.6	50
9	MI-259 (45)	45.7	50
10	MI-2510 (45)	50.8	50
11	MI-2511 (45)	55.9	50
12	MI-2512 (45)	61.0	50
13	MI-2513 (45)	66.0	20
14	MI-2514 (45)	71.1	20
15	MI-2515 (45)	76.2	20
16	MI-2516 (45)	81.3	20
17	MI-2517 (45)	86.4	20
18	MI-2518 (45)	91.4	20
19	MI-2519 (45)	96.5	20
20	MI-2520 (45)	101.6	20
21	MI-2521 (45)	106.7	20
22	MI-2522 (45)	111.8	20
23	MI-2523 (45)	116.8	20
24	MI-2524 (45)	121.9	20

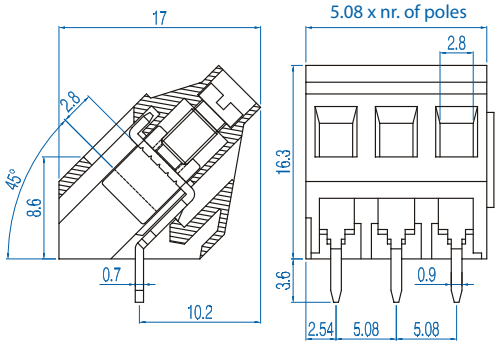

②16A Factory Wiring - UL

5.08mm Pin Spacing – Fixed PCB Blocks

Pin Spacing: 5.08mm
Orientation: Vertical - Tall
Clamp Type: Screw Cage
Design: Modular

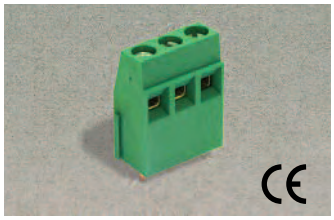

MMT-15xx

ELECTRICAL

	Current	Voltage	Wire Range
c UL us E178356	10A	300V	30-16 AWG
IEC	13.5A	250V	1.5mm² stranded 1.5mm² solid

INSTALLATION DATA

Screw Size	M3	**PCB Hole Size**	1.3mm
Torque	0.5Nm (4.5lbf-in)	**Stripping Lgth.**	5.9mm

MATERIAL

Body	Polyamide	**Screw**	Galvanized Steel
Flammability Class	UL94V-0	**Terminal**	Tin-Plated Brass
Temperature Limit	105°C UL 125°C IEC	**Clamp**	Nickeled Brass
Color	Green		

No. Poles	Cat. #	Length (mm)	Std. Pk.
2	MMT-152	10.2	100
3	MMT-153	15.2	100
4	MMT-154	20.3	50
5	MMT-155	25.4	50
6	MMT-156	30.5	50
7	MMT-157	37.5	50
8	MMT-158	40.6	50
9	MMT-159	45.7	50
10	MMT-1510	50.8	50
11	MMT-1511	55.9	50
12	MMT-1512	61.0	50
13	MMT-1513	66.0	20
14	MMT-1514	71.1	20
15	MMT-1515	76.2	20
16	MMT-1516	81.3	20
17	MMT-1517	86.4	20
18	MMT-1518	91.4	20
19	MMT-1519	96.5	20
20	MMT-1520	101.6	20
21	MMT-1521	106.7	20
22	MMT-1522	111.8	20
23	MMT-1523	116.8	20
24	MMT-1524	121.9	20

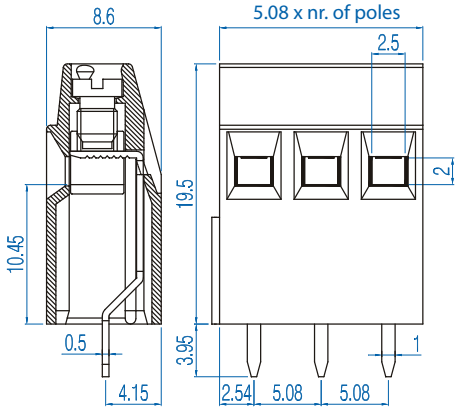

Pin Spacing: 5.08mm
Orientation: Vertical - Double Level
Clamp Type: Screw Cage
Design: Modular - Offset

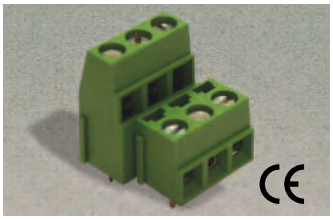

MVD-15xx

ELECTRICAL

	Current	Voltage	Wire Range
c UL us E178356	10A①	300V	30-16 AWG
IEC	13.5A	250V	1.5mm² stranded 1.5mm² solid

INSTALLATION DATA

Screw Size	M3	**PCB Hole Size**	1.3mm
Torque	0.5Nm (4.5lbf-in)	**Stripping Lgth.**	6.7mm

MATERIAL

Body	Polyamide	**Screw**	Galvanized Steel
Flammability Class	UL94V-0	**Terminal**	Tin-Plated Brass
Temperature Limit	105°C UL 125°C IEC	**Clamp**	Nickeled Brass
Color	Green		

No. Poles	Cat. #	Length (mm)	Std. Pk.
4	MVD-152	12.7	100
6	MVD-153	17.8	100
8	MVD-154	22.9	50
10	MVD-155	27.9	50
12	MVD-156	33.0	50
14	MVD-157	38.1	50
16	MVD-158	43.2	50
18	MVD-159	48.3	50
20	MVD-1510	53.3	50
22	MVD-1511	58.4	20
24	MVD-1512	63.5	20
26	MVD-1513	68.6	20
28	MVD-1514	73.7	20
30	MVD-1515	78.7	20
32	MVD-1516	83.2	20
34	MVD-1517	88.9	20
36	MVD-1518	94.0	20
38	MVD-1519	99.1	20
40	MVD-1520	104.1	10
42	MVD-1521	109.2	10
44	MVD-1522	114.3	10
46	MVD-1523	119.4	10
48	MVD-1524	124.5	10
50	MVD-1525	129.5	10

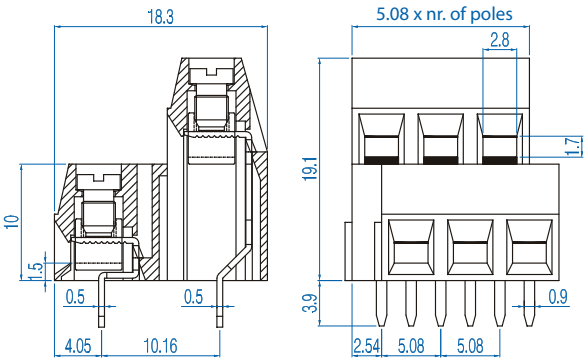

①13.5A Factory Wiring - UL

5.08mm Pin Spacing – Fixed PCB Blocks

Pin Spacing: 5.08mm
Orientation: Vertical-Double Level
Clamp Type: Screw Cage
Design: Modular-Offset

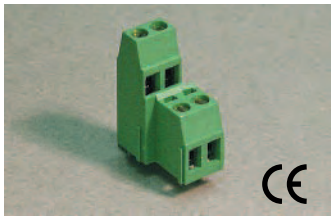

MVD-25xx

ELECTRICAL

	Current	Voltage	Wire Range
c UL us E178356	15A①	300V	30-14AWG
IEC	16A	450V	2.5mm² Stranded 4.0mm² Solid

INSTALLATION DATA

Screw Size	M3	**PCB Hole Size**	1.3mm
Torque	0.5Nm (4.5 lbf-in.)	**Stripping Lgth.**	8.3mm

MATERIAL

Body	Polyamide	**Screw**	Galvanized Steel
Flammability Class	UL94V-0	**Terminal**	Tin-Plated Brass
Temperature Limit	105˚C UL 125˚C IEC	**Clamp**	Nickeled Brass
Color	Green		

No. Poles	Cat. #	Length (mm)	Std. Pk.
4	MVD-252	12.7	100
6	MVD-253	17.8	100
8	MVD-254	22.9	50
10	MVD-255	27.9	50
12	MVD-256	33.0	50
14	MVD-257	38.1	50
16	MVD-258	43.2	50
18	MVD-259	48.3	50
20	MVD-2510	53.3	50
22	MVD-2511	58.4	20
24	MVD-2512	63.5	20
26	MVD-2513	68.6	20
28	MVD-2514	73.7	20
30	MVD-2515	78.7	20
32	MVD-2516	83.2	20
34	MVD-2517	88.9	20
36	MVD-2518	94.0	20
38	MVD-2519	99.1	20
40	MVD-2520	104.1	10
42	MVD-2521	109.2	10
44	MVD-2522	114.3	10
46	MVD-2523	119.4	10
48	MVD-2524	124.5	10
50	MVD-2525	129.5	10

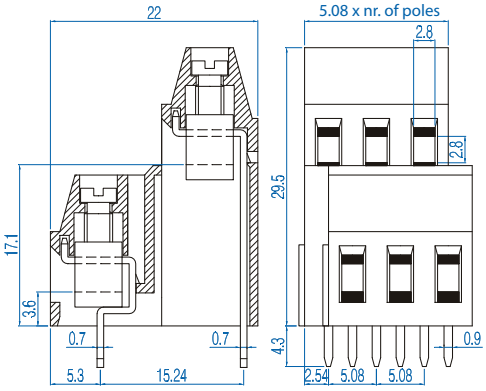

①16A Factory Wiring - UL

Pin Spacing: 5.08mm
Orientation: Vertical-Double Level
Clamp Type: Screw Cage
Design: Modular-Aligned

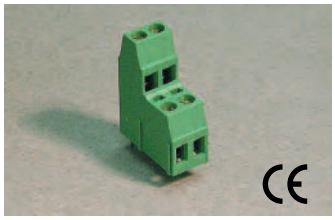

MVDK-25xx

ELECTRICAL

	Current	Voltage	Wire Range
c UL us E178356	15A②	300V	30-14AWG
IEC	16A	450V	2.5mm² Stranded 4.0mm² Solid

INSTALLATION DATA

Screw Size	M3	**PCB Hole Size**	1.3mm
Torque	0.5Nm (4.5 lbf-in.)	**Stripping Lgth.**	8.3mm

MATERIAL

Body	Polyamide	**Screw**	Galvanized Steel
Flammability Class	UL94V-0	**Terminal**	Tin-Plated Brass
Temperature Limit	105˚C UL 125˚C IEC	**Clamp**	Nickeled Brass
Color	Green		

No. Poles	Cat. #	Length (mm)	Std. Pk.
4	MVDK-252	10.2	100
6	MVDK-253	15.2	100
8	MVDK-254	20.3	50
10	MVDK-255	25.4	50
12	MVDK-256	30.5	50
14	MVDK-257	35.6	50
16	MVDK-258	40.6	50
18	MVDK-259	45.7	50
20	MVDK-2510	50.8	50
22	MVDK-2511	55.9	20
24	MVDK-2512	61.0	20
26	MVDK-2513	66.0	20
28	MVDK-2514	71.1	20
30	MVDK-2515	76.2	20
32	MVDK-2516	81.3	20
34	MVDK-2517	86.4	20
36	MVDK-2518	91.4	20
38	MVDK-2519	96.5	20
40	MVDK-2520	101.6	10
42	MVDK-2521	106.7	10
44	MVDK-2522	111.8	10
46	MVDK-2523	116.8	10
48	MVDK-2524	121.9	10
50	MVDK-2525	129.5	10

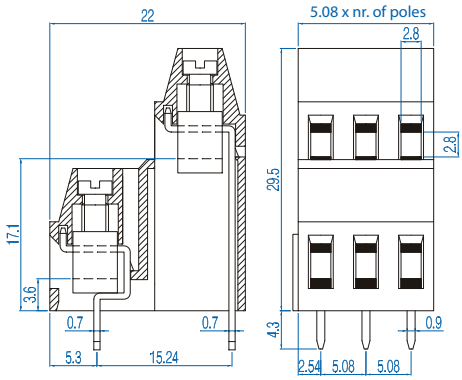

② 16A Factory Wiring - UL

5.08 and 6.35mm Pin Spacing – Fixed PCB Blocks

Pin Spacing: 5.08mm
Orientation: Vertical-Triple Level
Clamp Type: Screw Cage
Design: Modular

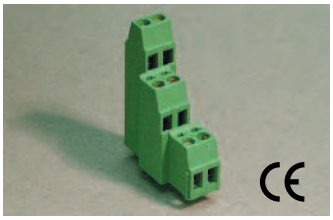

MVT-25xx

ELECTRICAL

	Current	Voltage	Wire Range
c UL us E178356	15A①	300V	30-14AWG
IEC	16A	450V	2.5mm² Stranded 4.0mm² Solid

INSTALLATION DATA

Screw Size	M3	**PCB Hole Size**	1.3mm
Torque	0.5Nm (4.5 lbf-in.)	**Stripping Lgth.**	8.3mm

MATERIAL

Body	Polyamide	**Screw**	Galvanized Steel
Flammability Class	UL94V-0	**Terminal**	Tin-Plated Brass
Temperature Limit	105˚C UL 125˚C IEC	**Clamp**	Nickeled Brass
Color	Green		

No. Poles	Cat. #	Length (mm)	Std. Pk.
6	MVT-252	12.7	50
9	MVT-253	17.8	50
12	MVT-254	22.9	30
15	MVT-255	27.9	30
18	MVT-256	33.0	30
21	MVT-257	38.1	30
24	MVT-258	43.2	30
27	MVT-259	48.3	30
30	MVT-2510	53.3	30
33	MVT-2511	58.4	15
36	MVT-2512	63.5	15
39	MVT-2513	68.6	15
42	MVT-2514	73.7	15
45	MVT-2515	78.7	15
48	MVT-2516	83.2	15
51	MVT-2517	88.9	15
54	MVT-2518	94.0	15
57	MVT-2519	99.1	15
60	MVT-2520	104.1	5
63	MVT-2521	109.2	5
66	MVT-2522	114.3	5
69	MVT-2523	119.4	5
72	MVT-2524	124.5	5

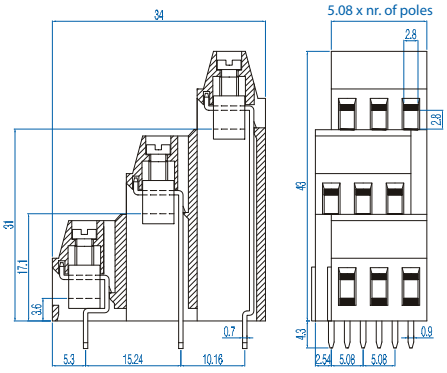

① 16A Factory Wiring - UL

Pin Spacing: 6.35mm/ 12.7mm*
Orientation: Vertical
Clamp Type: Screw Cage
Design: Modular

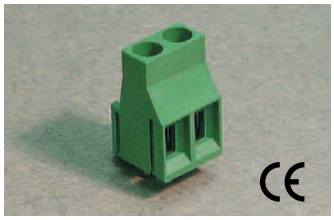

MV-46xx

ELECTRICAL

	Current	Voltage	Wire Range
c UL us E178356	20A②	300V	30-12AWG
IEC	25A	500V	4.0mm² Stranded 6.0mm² Solid

INSTALLATION DATA

Screw Size	M3	**PCB Hole Size**	1.3mm
Torque	0.5Nm (4.5 lbf-in.)	**Stripping Lgth.**	9.8mm

MATERIAL

Body	Polyamide	**Screw**	Galvanized Steel
Flammability Class	UL94V-0	**Terminal**	Tin-Plated Brass
Temperature Limit	105˚C UL 125˚C IEC	**Clamp**	Nickeled Brass
Color	Green		

No. Poles	Cat. #	Length (mm)	Std. Pk.
2	MV-462	12.7	100
3	MV-463	19.0	100
4	MV-464	25.4	50
5	MV-465	31.7	50
6	MV-466	38.0	50
7	MV-467	44.4	50
8	MV-468	50.7	50
9	MV-469	57.0	50
10	MV-4610	63.4	50
11	MV-4611	69.7	50
12	MV-4612	76.0	50
13	MV-4613	82.4	20
14	MV-4614	88.7	20
15	MV-4615	95.0	20
16	MV-4616	101.4	20

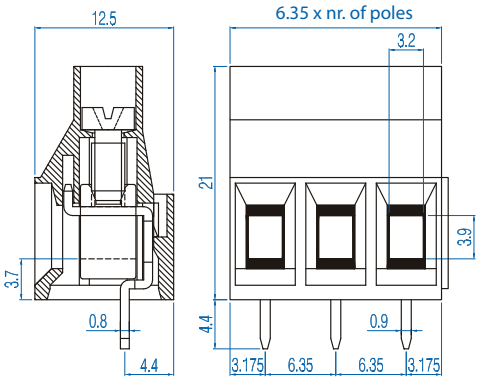

② 25A Factory Wiring - UL

* 12.7mm Pin spacing available

Altech Corp.® • 35 Royal Road • Flemington, NJ 08822-6000 • Phone (908)806-9400 • FAX (908)806-9490 • www.altechcorp.com

Pin Spacing: 7.50mm
Orientation: Vertical
Clamp Type: Screw Cage
Design: Modular

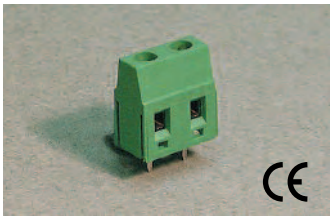

MVE-27xx

ELECTRICAL

	Current	Voltage	Wire Range
c UL us E178356	15A①	300V	30-14AWG
IEC	16A	750V	2.5mm² Stranded 4.0mm² Solid

INSTALLATION DATA

Screw Size	M3	**PCB Hole Size**	1.3mm
Torque	0.5Nm (4.5 lbf-in.)	**Stripping Lgth.**	7.1mm

MATERIAL

Body	Polyamide	**Screw**	Galvanized Steel
Flammability Class	UL94V-0	**Terminal**	Tin-Plated Brass
Temperature Limit	105˚C UL 125˚C IEC	**Clamp**	Nickeled Brass
Color	Green		

No. Poles	Cat. #	Length (mm)	Std. Pk.
2	MVE-272	15.0	100
3	MVE-273	22.5	100
4	MVE-274	30.0	50
5	MVE-275	37.5	50
6	MVE-276	45.0	50
7	MVE-277	52.5	50
8	MVE-278	60.0	50
9	MVE-279	67.5	50
10	MVE-2710	75.0	50
11	MVE-2711	82.5	50
12	MVE-2712	90.0	50
13	MVE-2713	97.5	20
14	MVE-2714	105.0	20
15	MVE-2715	112.5	20
16	MVE-2716	120.0	20

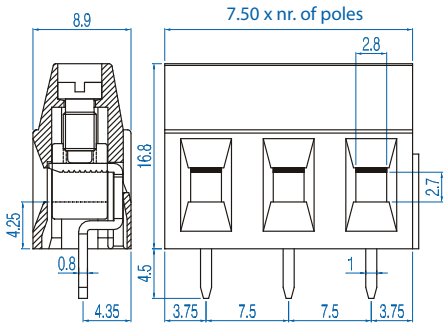

① 16A Factory Wiring - UL

Pin Spacing: 7.50mm
Orientation: Horizontal
Clamp Type: Screw Cage
Design: Modular

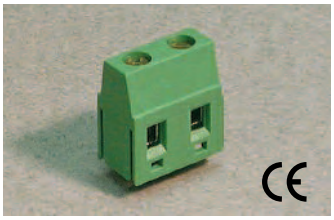

MHE-27xx

ELECTRICAL

	Current	Voltage	Wire Range
c UL us E178356	15A②	300V	30-14AWG
IEC	16A	750V	2.5mm² Stranded 4.0mm² Solid

INSTALLATION DATA

Screw Size	M3	**PCB Hole Size**	1.3mm
Torque	0.5Nm (4.5 lbf-in.)	**Stripping Lgth.**	7.1mm

MATERIAL

Body	Polyamide	**Screw**	Galvanized Steel
Flammability Class	UL94V-0	**Terminal**	Tin-Plated Brass
Temperature Limit	105˚C UL 125˚C IEC	**Clamp**	Nickeled Brass
Color	Green		

No. Poles	Cat. #	Length (mm)	Std. Pk.
2	MHE-272	15.0	100
3	MHE-273	22.5	100
4	MHE-274	30.0	50
5	MHE-275	37.5	50
6	MHE-276	45.0	50
7	MHE-277	52.5	50
8	MHE-278	60.0	50
9	MHE-279	67.5	50
10	MHE-2710	75.0	50
11	MHE-2711	82.5	50
12	MHE-2712	90.0	50
13	MHE-2713	97.5	20
14	MHE-2714	105.0	20
15	MHE-2715	112.5	20
16	MHE-2716	120.0	20

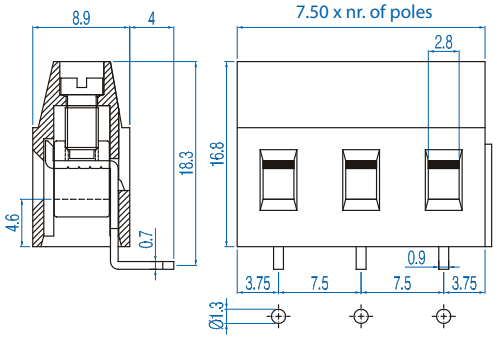

② 16A Factory Wiring - UL

7.50mm Pin Spacing – Fixed PCB Blocks

Pin Spacing: 7.50mm
Orientation: Vertical
Clamp Type: Screw Cage
Design: Modular

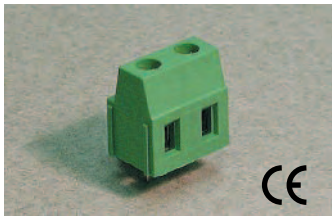

MV-27xx

ELECTRICAL

	Current	Voltage	Wire Range
c UL us E178356	15A①	300V	30-14AWG
IEC	16A	750V	2.5mm² Stranded 4.0mm² Solid

INSTALLATION DATA

Screw Size	M3	**PCB Hole Size**	1.3mm
Torque	0.5Nm (4.5 lbf-in.)	**Stripping Lgth.**	8.3mm

MATERIAL

Body	Polyamide	**Screw**	Galvanized Steel
Flammability Class	UL94V-0	**Terminal**	Tin-Plated Brass
Temperature Limit	105˚C UL 125˚C IEC	**Clamp**	Nickeled Brass
Color	Green		

No. Poles	Cat. #	Length (mm)	Std. Pk.
2	MV-272	15.0	100
3	MV-273	22.5	100
4	MV-274	30.0	50
5	MV-275	37.5	50
6	MV-276	45.0	50
7	MV-277	52.5	50
8	MV-278	60.0	50
9	MV-279	67.5	50
10	MV-2710	75.0	50
11	MV-2711	82.5	50
12	MV-2712	90.0	50
13	MV-2713	97.5	20
14	MV-2714	105.0	20
15	MV-2715	112.5	20
16	MV-2716	120.0	20

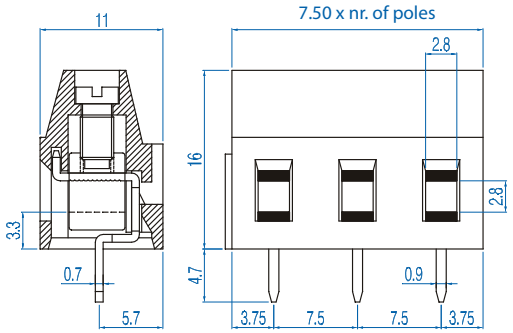

① 16A Factory Wiring - UL

Pin Spacing: 7.50mm
Orientation: Horizontal
Clamp Type: Screw Cage
Design: Modular

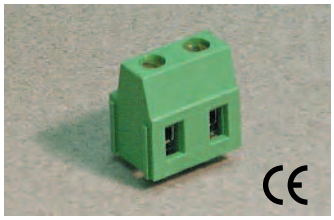

MH-27xx

ELECTRICAL

	Current	Voltage	Wire Range
c UL us E178356	15A②	300V	30-14AWG
IEC	16A	750V	2.5mm² Stranded 4.0mm² Solid

INSTALLATION DATA

Screw Size	M3	**PCB Hole Size**	1.3mm
Torque	0.5Nm (4.5 lbf-in.)	**Stripping Lgth.**	8.3mm

MATERIAL

Body	Polyamide	**Screw**	Galvanized Steel
Flammability Class	UL94V-0	**Terminal**	Tin-Plated Brass
Temperature Limit	105˚C UL 125˚C IEC	**Clamp**	Nickeled Brass
Color	Green		

No. Poles	Cat. #	Length (mm)	Std. Pk.
2	MH-272	15.0	100
3	MH-273	22.5	100
4	MH-274	30.0	50
5	MH-275	37.5	50
6	MH-276	45.0	50
7	MH-277	52.5	50
8	MH-278	60.0	50
9	MH-279	67.5	50
10	MH-2710	75.0	50
11	MH-2711	82.5	50
12	MH-2712	90.0	50
13	MH-2713	97.5	20
14	MH-2714	105.0	20
15	MH-2715	112.5	20
16	MH-2716	120.0	20

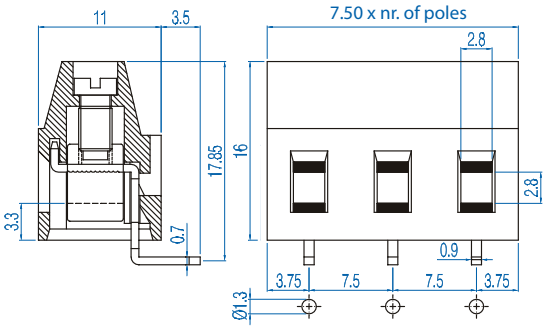

② 16A Factory Wiring - UL

7.50mm Pin Spacing – Fixed PCB Blocks

Pin Spacing: 7.50mm
Orientation: Reverse Horizontal
Clamp Type: Screw Cage
Design: Modular

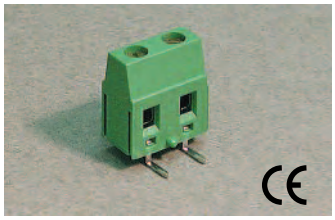

MHR-27xx

ELECTRICAL

	Current	Voltage	Wire Range
c UL us E178356	15A①	300V	30-14AWG
IEC	16A	450V	2.5mm² Stranded 4.0mm² Solid

INSTALLATION DATA

Screw Size	M3	**PCB Hole Size**	1.3mm
Torque	0.5Nm (4.5 lbf-in.)	**Stripping Lgth.**	7.1mm

MATERIAL

Body	Polyamide	**Screw**	Galvanized Steel
Flammability Class	UL94V-0	**Terminal**	Tin-Plated Brass
Temperature Limit	105˚C UL 125˚C IEC	**Clamp**	Nickeled Brass
Color	Green		

No. Poles	Cat. #	Length (mm)	Std. Pk.
2	MHR-272	15.0	100
3	MHR-273	22.5	100
4	MHR-274	30.0	50
5	MHR-275	37.5	50
6	MHR-276	45.0	50
7	MHR-277	52.5	50
8	MHR-278	60.0	50
9	MHR-279	67.5	50
10	MHR-2710	75.0	50
11	MHR-2711	82.5	50
12	MHR-2712	90.0	50
13	MHR-2713	97.5	20
14	MHR-2714	105.0	20
15	MHR-2715	112.5	20
16	MHR-2716	120.0	20

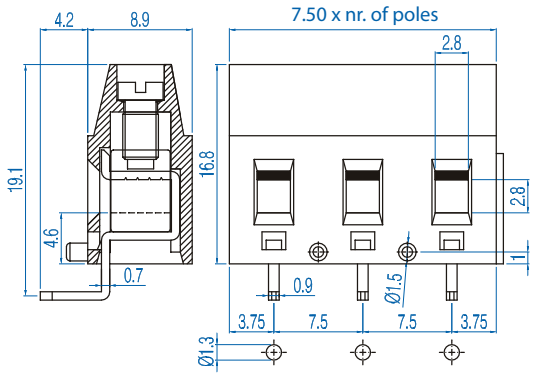

①16A Factory Wiring - UL

Pin Spacing: 7.50mm
Orientation: 35˚
Clamp Type: Screw Cage
Design: Modular

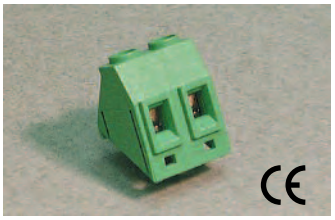

MI-27xx

ELECTRICAL

	Current	Voltage	Wire Range
c UL us E178356	15A②	300V	30-14AWG
IEC	16A	750V	2.5mm² Stranded 4.0mm² Solid

INSTALLATION DATA

Screw Size	M3	**PCB Hole Size**	1.3mm
Torque	0.5Nm (4.5 lbf-in.)	**Stripping Lgth.**	9.3mm

MATERIAL

Body	Polyamide	**Screw**	Galvanized Steel
Flammability Class	UL94V-0	**Terminal**	Tin-Plated Brass
Temperature Limit	105˚C UL 125˚C IEC	**Clamp**	Nickeled Brass
Color	Green		

No. Poles	Cat. #	Length (mm)	Std. Pk.
2	MI-272	15.0	100
3	MI-273	22.5	100
4	MI-274	30.0	50
5	MI-275	37.5	50
6	MI-276	45.0	50
7	MI-277	52.5	50
8	MI-278	60.0	50
9	MI-279	67.5	50
10	MI-2710	75.0	50
11	MI-2711	82.5	50
12	MI-2712	90.0	50
13	MI-2713	97.5	20
14	MI-2714	105.0	20
15	MI-2715	112.5	20
16	MI-2716	120.0	20

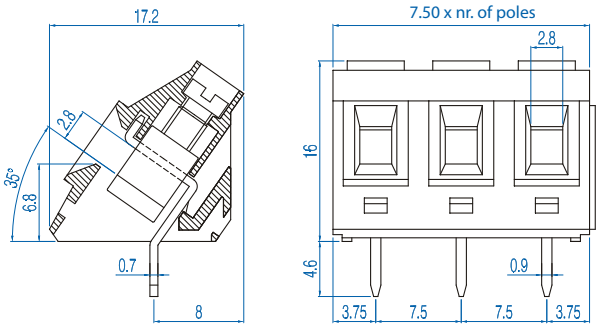

②16A Factory Wiring - UL

7.62mm Pin Spacing – Fixed PCB Blocks

Pin Spacing: 7.62mm
Orientation: Vertical
Clamp Type: Screw Cage
Design: Modular

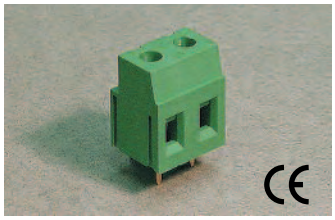

MVSP-27xx

ELECTRICAL

	Current	Voltage	Wire Range
c UL us E178356	15A①	300V	30-14AWG
IEC	24A	750V	2.5mm² Stranded 4.0mm² Solid

INSTALLATION DATA

Screw Size	M3	**PCB Hole Size**	1.5mm
Torque	0.5Nm (4.5 lbf-in.)	**Stripping Lgth.**	9.5mm

MATERIAL

Body	Polyamide	**Screw**	Galvanized Steel
Flammability Class	UL94V-0	**Terminal**	Tin-Plated Brass
Temperature Limit	105˚C UL 125˚C IEC	**Clamp**	Nickeled Brass
Color	Green		

No. Poles	Cat. #	Length (mm)	Std. Pk.
2	MVSP-272	15.2	100
3	MVSP-273	22.9	100
4	MVSP-274	30.5	50
5	MVSP-275	38.1	50
6	MVSP-276	45.7	50
7	MVSP-277	53.3	50
8	MVSP-278	61.0	50
9	MVSP-279	68.6	50
10	MVSP-2710	76.2	50
11	MVSP-2711	83.8	50
12	MVSP-2712	91.4	50
13	MVSP-2713	99.1	20
14	MVSP-2714	106.7	20
15	MVSP-2715	114.3	20
16	MVSP-2716	121.9	20

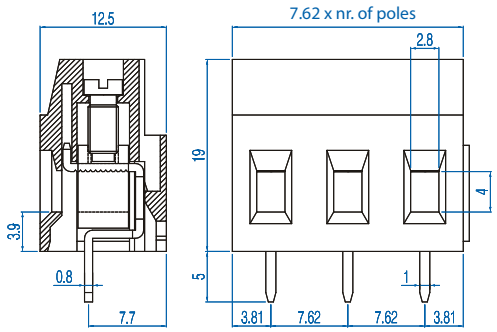

① 20A Factory Wiring - UL

Pin Spacing: 7.62mm
Orientation: Horizontal
Clamp Type: Screw Cage
Design: Modular

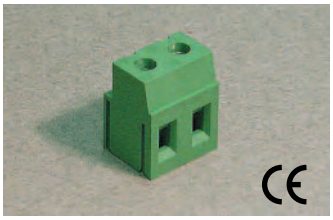

MHSP-27xx

ELECTRICAL

	Current	Voltage	Wire Range
c UL us E178356	15A②	300V	30-14AWG
IEC	24A	750V	2.5mm² Stranded 4.0mm² Solid

INSTALLATION DATA

Screw Size	M3	**PCB Hole Size**	1.5mm
Torque	0.5Nm (4.5 lbf-in.)	**Stripping Lgth.**	9.5mm

MATERIAL

Body	Polyamide	**Screw**	Galvanized Steel
Flammability Class	UL94V-0	**Terminal**	Tin-Plated Brass
Temperature Limit	105˚C UL 125˚C IEC	**Clamp**	Nickeled Brass
Color	Green		

No. Poles	Cat. #	Length (mm)	Std. Pk.
2	MHSP-272	15.2	100
3	MHSP-273	22.9	100
4	MHSP-274	30.5	50
5	MHSP-275	38.1	50
6	MHSP-276	45.7	50
7	MHSP-277	53.3	50
8	MHSP-278	61.0	50
9	MHSP-279	68.6	50
10	MHSP-2710	76.2	50
11	MHSP-2711	83.8	50
12	MHSP-2712	91.4	50
13	MHSP-2713	99.1	20
14	MHSP-2714	106.7	20
15	MHSP-2715	114.3	20
16	MHSP-2716	121.9	20

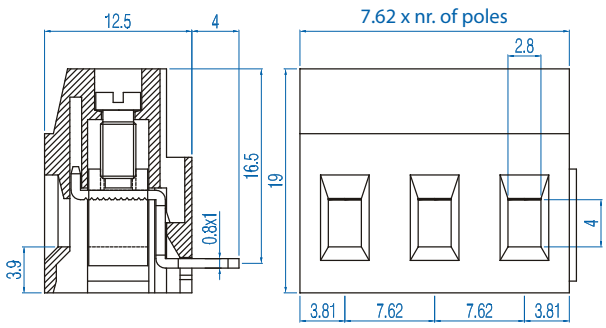

② 20A Factory Wiring - UL

7.62 and 9.52mm Pin Spacing – Fixed PCB Blocks

Pin Spacing: 7.62mm
Orientation: Vertical
Clamp Type: Screw Cage
Design: Modular

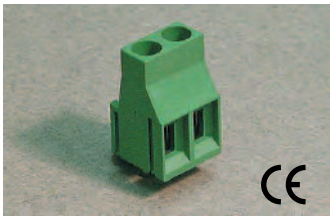

MV-47xx

ELECTRICAL

	Current	Voltage	Wire Range
c UL us E178356	20A①	300V	30-12AWG
IEC	25A	750V	4.0mm² Stranded 6.0mm² Solid

INSTALLATION DATA

Screw Size	M3	**PCB Hole Size**	1.3mm
Torque	0.5Nm (4.5 lbf-in.)	**Stripping Lgth.**	9.8mm

MATERIAL

Body	Polyamide	**Screw**	Galvanized Steel
Flammability Class	UL94V-0	**Terminal**	Tin-Plated Brass
Temperature Limit	105˚C UL 125˚C IEC	**Clamp**	Nickeled Brass
Color	Green		

No. Poles	Cat. #	Length (mm)	Std. Pk.
2	MV-472	15.2	100
3	MV-473	22.9	100
4	MV-474	30.5	50
5	MV-475	38.1	50
6	MV-476	45.7	50
7	MV-477	53.3	50
8	MV-478	61.0	50
9	MV-479	68.6	50
10	MV-4710	76.2	50
11	MV-4711	83.8	50
12	MV-4712	91.4	50
13	MV-4713	99.1	20
14	MV-4714	106.7	20
15	MV-4715	114.3	20
16	MV-4716	121.9	20

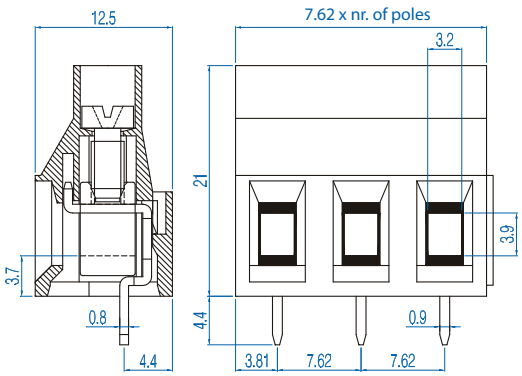

①25A Factory Wiring - UL

Pin Spacing: 9.52mm/ 19.04mm*
Orientation: Vertical
Clamp Type: Screw Cage
Design: Modular

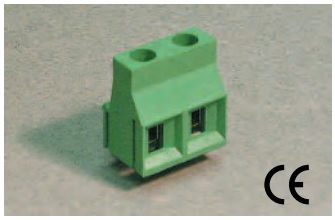

MV-49xx

ELECTRICAL

	Current	Voltage	Wire Range
c UL us E178356	20A②	300V	30-12AWG
IEC	25A	750V	4.0mm² Stranded 6.0mm² Solid

INSTALLATION DATA

Screw Size	M3	**PCB Hole Size**	1.3mm
Torque	0.5Nm (4.5 lbf-in.)	**Stripping Lgth.**	9.8mm

MATERIAL

Body	Polyamide	**Screw**	Galvanized Steel
Flammability Class	UL94V-0	**Terminal**	Tin-Plated Brass
Temperature Limit	105˚C UL 125˚C IEC	**Clamp**	Nickeled Brass
Color	Green		

No. Poles	Cat. #	Length (mm)	Std. Pk.
2	MV-492	19.0	100
3	MV-493	28.6	100
4	MV-494	38.1	50
5	MV-495	47.6	50
6	MV-496	57.1	50
7	MV-497	66.6	50
8	MV-498	76.2	50
9	MV-499	85.7	50
10	MV-4910	95.2	50
11	MV-4911	104.7	50
12	MV-4912	114.2	50
13	MV-4913	123.8	20
14	MV-4914	133.3	20
15	MV-4915	142.8	20
16	MV-4916	152.3	20

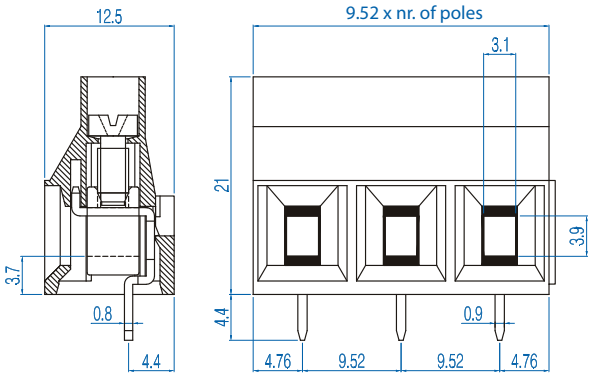

②25A Factory Wiring - UL

*19.04mm pin spacing available

10.00mm Pin Spacing – Fixed PCB Blocks

Pin Spacing: 10.00mm
Orientation: Vertical
Clamp Type: Box with Wire Protector
Design: Modular

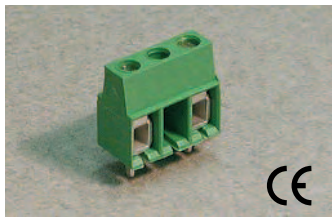

MVEB-15xx

ELECTRICAL

	Current	Voltage	Wire Range
c UL us E178356	10A	600V	30-16AWG
IEC	17.5A	750V	1.5mm² Stranded 2.5mm² Solid

INSTALLATION DATA

Screw Size	M2.5	**PCB Hole Size**	1.5mm
Torque	0.4Nm (3.6 lbf-in.)	**Stripping Lgth.**	6.8mm

MATERIAL

Body	Polyamide	**Screw**	Galvanized Steel
Flammability Class	UL94V-0	**Terminal**	Tin-Plated Brass
Temperature Limit	105˚C UL 125˚C IEC	**Wire Protector**	Tin-Plated Bronze
Color	Green		

No. Poles	Cat. #	Length (mm)	Std. Pk.
2	MVEB-152	15.0	100
3	MVEB-153	25.0	50
4	MVEB-154	35.0	50
5	MVEB-155	45.0	50
6	MVEB-156	55.0	50
7	MVEB-157	65.0	50
8	MVEB-158	75.0	20
9	MVEB-159	85.0	20
10	MVEB-1510	95.0	20
11	MVEB-1511	105.0	20
12	MVEB-1512	115.0	20

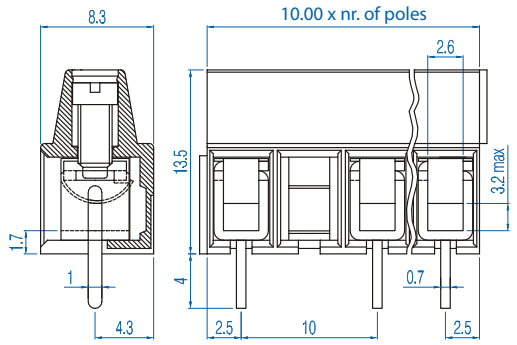

Pin Spacing: 10.00mm
Orientation: Vertical
Clamp Type: Screw Cage
Design: Modular

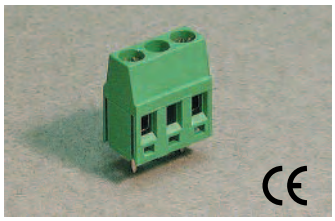

MVEB-25xx

ELECTRICAL

	Current	Voltage	Wire Range
c UL us E178356	15A①	600V	30-14AWG
IEC	16A	750V	2.5mm² Stranded 4.0mm² Solid

INSTALLATION DATA

Screw Size	M3	**PCB Hole Size**	1.3mm
Torque	0.5Nm (4.5 lbf-in.)	**Stripping Lgth.**	7.1mm

MATERIAL

Body	Polyamide	**Screw**	Galvanized Steel
Flammability Class	UL94V-0	**Terminal**	Tin-Plated Brass
Temperature Limit	105˚C UL 125˚C IEC	**Clamp**	Nickeled Brass
Color	Green		

No. Poles	Cat. #	Length (mm)	Std. Pk.
2	MVEB-252	15.0	100
3	MVEB-253	25.0	50
4	MVEB-254	35.0	50
5	MVEB-255	45.0	50
6	MVEB-256	55.0	50
7	MVEB-257	65.0	50
8	MVEB-258	75.0	20
9	MVEB-259	85.0	20
10	MVEB-2510	95.0	20
11	MVEB-2511	105.0	20
12	MVEB-2512	115.0	20

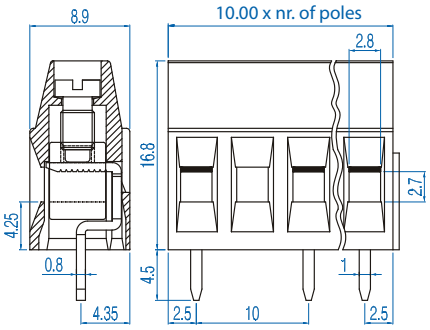

①16A Factory Wiring - UL

Pin Spacing: 10.00mm
Orientation: Horizontal
Clamp Type: Screw Cage
Design: Modular

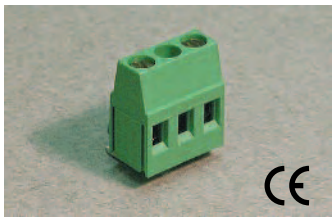

MHEB-25xx

ELECTRICAL

	Current	Voltage	Wire Range
c UL us E178356	15A①	600V	30-14AWG
IEC	16A	750V	2.5mm² Stranded 4.0mm² Solid

INSTALLATION DATA

Screw Size	M3	**PCB Hole Size**	1.3mm
Torque	0.5Nm (4.5 lbf-in.)	**Stripping Lgth.**	7.1mm

MATERIAL

Body	Polyamide	**Screw**	Galvanized Steel
Flammability Class	UL94V-0	**Terminal**	Tin-Plated Brass
Temperature Limit	105˚C UL 125˚C IEC	**Clamp**	Nickeled Brass
Color	Green		

No. Poles	Cat. #	Length (mm)	Std. Pk.
2	MHEB-252	15.0	100
3	MHEB-253	25.0	50
4	MHEB-254	35.0	50
5	MHEB-255	45.0	50
6	MHEB-256	55.0	50
7	MHEB-257	65.0	50
8	MHEB-258	75.0	20
9	MHEB-259	85.0	20
10	MHEB-2510	95.0	20
11	MHEB-2511	105.0	20
12	MHEB-2512	115.0	20

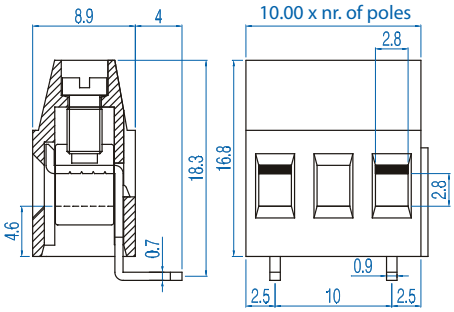

①16A Factory Wiring - UL

Pin Spacing: 10.00mm
Orientation: Vertical
Clamp Type: Screw
Design: Modular

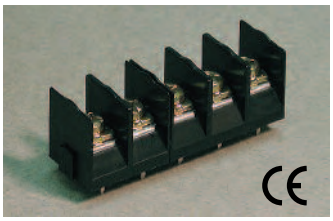

MT-21xx*

ELECTRICAL

	Current	Voltage	Wire Range
c UL us E178356	20A	300V	26-12AWG
IEC	25A	750V	2x2.5mm² Stranded 4.0mm² Solid

INSTALLATION DATA

Screw Size	M3.5	**PCB Hole Size**	1.4mm
Torque	0.8Nm (7.2 lbf-in.)	**Stripping Lgth.**	11.0mm

MATERIAL

Body	Polyamide	**Screw**	Galvanized Steel
Flammability Class	UL94V-0	**Terminal**	Tin-Plated Brass
Temperature Limit	105˚C UL 125˚C IEC	**Washer**	Iron
Color	Black		

No. Poles	Cat. #	Length (mm)	Std. Pk.
2	MT-2102	20.0	100
3	MT-2103	30.0	100
4	MT-2104	40.0	50
5	MT-2105	50.0	50
6	MT-2106	60.0	50
7	MT-2107	70.0	50
8	MT-2108	80.0	50
9	MT-2109	90.0	50
10	MT-2110	100.0	50
11	MT-2111	110.0	50
12	MT-2112	120.0	50

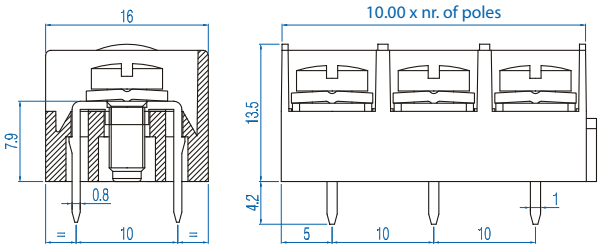

* Also available with back wall.

10.16mm Pin Spacing – Fixed PCB Blocks

Pin Spacing: 10.16mm
Orientation: Vertical
Clamp Type: Screw Cage
Design: Modular

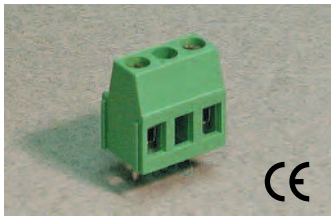

MVB-25xx

ELECTRICAL

	Current	Voltage	Wire Range
c UL us E178356	15A①	300V	30-14AWG
IEC	16A	750V	2.5mm² Stranded 4.0mm² Solid

INSTALLATION DATA

Screw Size	M3	**PCB Hole Size**	1.3mm
Torque	0.5Nm (4.5 lbf-in.)	**Stripping Lgth.**	8.3mm

MATERIAL

Body	Polyamide	**Screw**	Galvanized Steel
Flammability Class	UL94V-0	**Terminal**	Tin-Plated Brass
Temperature Limit	105˚C UL 125˚C IEC	**Clamp**	Nickeled Brass
Color	Green		

No. Poles	Cat. #	Length (mm)	Std. Pk.
2	MVB-252	15.2	100
3	MVB-253	25.4	50
4	MVB-254	35.6	50
5	MVB-255	45.7	50
6	MVB-256	55.9	50
7	MVB-257	66.0	50
8	MVB-258	76.2	20
9	MVB-259	86.4	20
10	MVB-2510	96.5	20
11	MVB-2511	106.7	20
12	MVB-2512	116.8	20

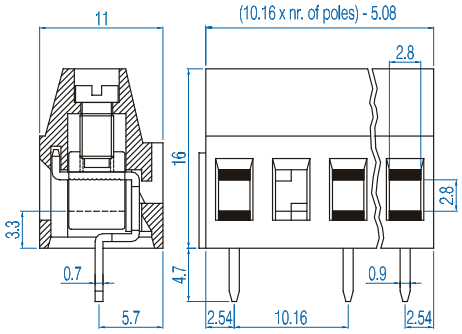

①16A Factory Wiring - UL

Pin Spacing: 10.16mm
Orientation: Horizontal
Clamp Type: Screw Cage
Design: Modular

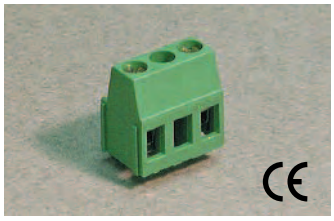

MHB-25xx

ELECTRICAL

	Current	Voltage	Wire Range
c UL us E178356	15A②	300V	30-14AWG
IEC	16A	750V	2.5mm² Stranded 4.0mm² Solid

INSTALLATION DATA

Screw Size	M3	**PCB Hole Size**	1.3mm
Torque	0.5Nm (4.5 lbf-in.)	**Stripping Lgth.**	8.3mm

MATERIAL

Body	Polyamide	**Screw**	Galvanized Steel
Flammability Class	UL94V-0	**Terminal**	Tin-Plated Brass
Temperature Limit	105˚C UL 125˚C IEC	**Clamp**	Nickeled Brass
Color	Green		

No. Poles	Cat. #	Length (mm)	Std. Pk.
2	MHB-252	15.2	100
3	MHB-253	25.4	50
4	MHB-254	35.6	50
5	MHB-255	45.7	50
6	MHB-256	55.9	50
7	MHB-257	66.0	50
8	MHB-258	76.2	20
9	MHB-259	86.4	20
10	MHB-2510	96.5	20
11	MHB-2511	106.7	20
12	MHB-2512	116.8	20

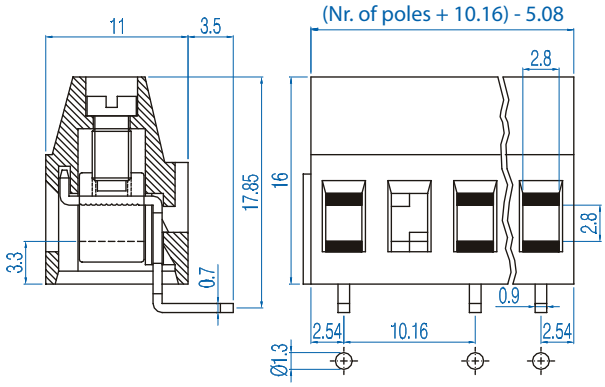

②16A Factory Wiring - UL

Pin Spacing: 10.16mm
Orientation: Vertical
Clamp Type: Screw Cage
Design: Modular

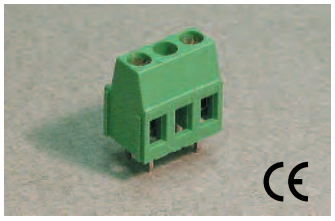

MVB-25xx-D

ELECTRICAL

	Current	Voltage	Wire Range
c UL us E178356	15A①	300V	30-14AWG
IEC	24A	750V	2.5mm² Stranded 4.0mm² Solid

INSTALLATION DATA

Screw Size	M3	**PCB Hole Size**	1.3mm
Torque	0.5Nm (4.5 lbf-in.)	**Stripping Lgth.**	8.3mm

MATERIAL

Body	Polyamide	**Screw**	Galvanized Steel
Flammability Class	UL94V-0	**Terminal**	Tin-Plated Brass
Temperature Limit	105˚C UL 125˚C IEC	**Clamp**	Nickeled Brass
Color	Green		

No. Poles	Cat. #	Length (mm)	Std. Pk.
2	MVB-252-D	15.2	100
3	MVB-253-D	25.4	50
4	MVB-254-D	35.6	50
5	MVB-255-D	45.7	50
6	MVB-256-D	55.9	50
7	MVB-257-D	66.0	50
8	MVB-258-D	76.2	20
9	MVB-259-D	86.4	20
10	MVB-2510-D	96.5	20
11	MVB-2511-D	106.7	20
12	MVB-2512-D	116.8	20

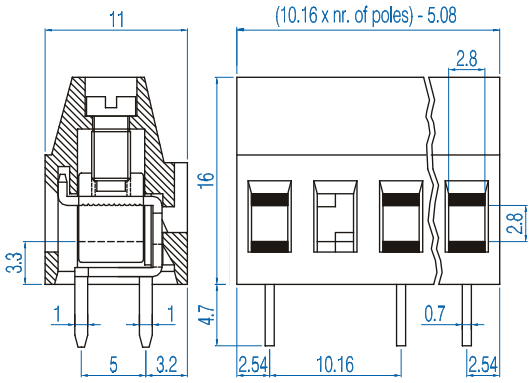

Pin Spacing: 10.16mm
Orientation: Vertical
Clamp Type: Screw Cage
Design: Modular

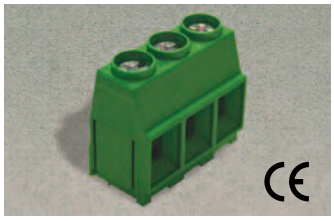

MV-10xx

ELECTRICAL

	Current	Voltage	Wire Range
c UL us E178356	57A①	600V	30-6AWG
IEC	57A	750V	10.0mm² Stranded 16.0mm² Solid

INSTALLATION DATA

Screw Size	M4	**PCB Hole Size**	1.7mm
Torque	1.2Nm (10.8 lbf-in.)	**Stripping Lgth.**	15mm

MATERIAL

Body	Polyamide	**Screw**	Galvanized Steel
Flammability Class	UL94V-0	**Terminal**	Tin-Plated Brass
Temperature Limit	105˚C UL 125˚C IEC	**Clamp**	Nickeled Brass
Color	Green		

No. Poles	Cat. #	Length (mm)	Std. Pk.
2	MV-1002	20.3	100
3	MV-1003	30.5	50
4	MV-1004	40.6	50
5	MV-1005	50.8	50
6	MV-1006	61.0	50
7	MV-1007	71.1	50
8	MV-1008	81.3	20
9	MV-1009	91.4	20
10	MV-1010	101.2	20
11	MV-1011	111.8	20
12	MV-1012	121.9	20

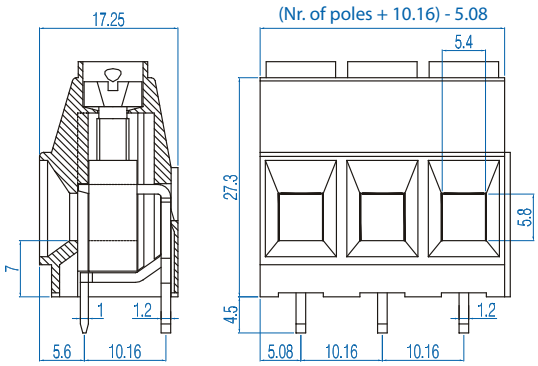

①18A Factory Wiring - UL

10.16mm Pin Spacing – Fixed PCB Blocks

Pin Spacing: 10.16mm
Orientation: Vertical-Double Level
Clamp Type: Screw Cage
Design: Modular-Aligned

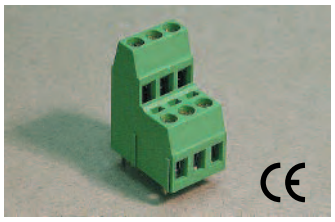

MVDKB-25xx

ELECTRICAL

	Current	Voltage	Wire Range
c UL us E178356	15A①	300V	30-14AWG
IEC	16A	750V	2.5mm² Stranded 4.0mm² Solid

INSTALLATION DATA

Screw Size	M3	**PCB Hole Size**	1.3mm
Torque	0.5Nm (4.5 lbf-in.)	**Stripping Lgth.**	8.3mm

MATERIAL

Body	Polyamide	**Screw**	Galvanized Steel
Flammability Class	UL94V-0	**Terminal**	Tin-Plated Brass
Temperature Limit	105˚C UL 125˚C IEC	**Clamp**	Nickeled Brass
Color	Green		

No. Poles	Cat. #	Length (mm)	Std. Pk.
4	MVDKB-252	15.2	100
6	MVDKB-253	25.4	50
8	MVDKB-254	35.6	50
10	MVDKB-255	45.7	50
12	MVDKB-256	55.9	20
14	MVDKB-257	66.0	20
16	MVDKB-258	76.2	20
18	MVDKB-259	86.4	20
20	MVDKB-2510	96.5	10
22	MVDKB-2511	106.7	10
24	MVDKB-2512	116.8	10

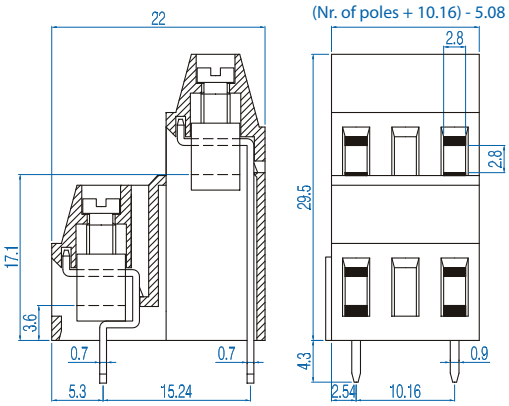

①16A Factory Wiring - UL

Pin Spacing: 10.16mm
Orientation: Vertical-Double Level
Clamp Type: Screw Cage
Design: Modular - Offset

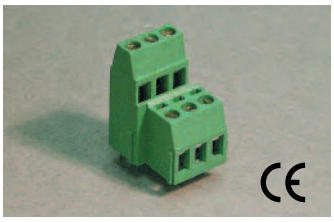

MVDB-25xx

ELECTRICAL

	Current	Voltage	Wire Range
c UL us E178356	15A②	300V	30-14AWG
IEC	16A	750V	2.5mm² Stranded 4.0mm² Solid

INSTALLATION DATA

Screw Size	M3	**PCB Hole Size**	1.3mm
Torque	0.5Nm (4.5 lbf-in.)	**Stripping Lgth.**	8.3mm

MATERIAL

Body	Polyamide	**Screw**	Galvanized Steel
Flammability Class	UL94V-0	**Terminal**	Tin-Plated Brass
Temperature Limit	105˚C UL 125˚C IEC	**Clamp**	Nickeled Brass
Color	Green		

No. Poles	Cat. #	Length (mm)	Std. Pk.
4	MVDB-252	17.8	100
6	MVDB-253	30.5	50
8	MVDB-254	43.2	50
10	MVDB-255	55.9	50
12	MVDB-256	68.6	20
14	MVDB-257	81.3	20
16	MVDB-258	94.0	20
18	MVDB-259	106.7	20
20	MVDB-2510	119.4	10
22	MVDB-2511	132.1	10
24	MVDB-2512	144.8	10

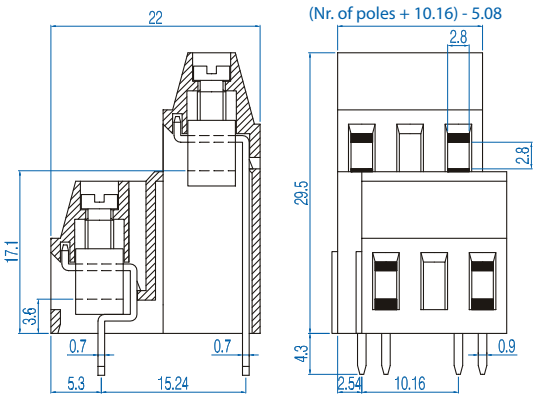

②16A Factory Wiring - UL

Pin Spacing: 10.16mm
Orientation: Vertical-Triple Level
Clamp Type: Screw Cage
Design: Modular

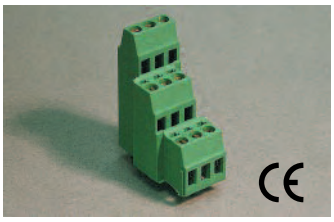

MVTB-25xx

ELECTRICAL

	Current	Voltage	Wire Range
c UL us E178356	15A①	300V	30-14AWG
IEC	16A	750V	2.5mm² Stranded 4.0mm² Solid

INSTALLATION DATA

Screw Size	M3	**PCB Hole Size**	1.3mm
Torque	0.5Nm (4.5 lbf-in.)	**Stripping Lgth.**	8.3mm

MATERIAL

Body	Polyamide	**Screw**	Galvanized Steel
Flammability Class	UL94V-0	**Terminal**	Tin-Plated Brass
Temperature Limit	105˚C UL 125˚C IEC	**Clamp**	Nickeled Brass
Color	Green		

No. Poles	Cat. #	Length (mm)	Std. Pk.
6	MVTB-252	17.8	50
9	MVTB-253	30.5	30
12	MVTB-254	43.2	30
15	MVTB-255	55.9	30
18	MVTB-256	68.6	15
21	MVTB-257	81.3	15
24	MVTB-258	94.0	15
27	MVTB-259	106.7	15
30	MVTB-2510	119.4	5
33	MVTB-2511	132.1	5
36	MVTB-2512	144.8	5

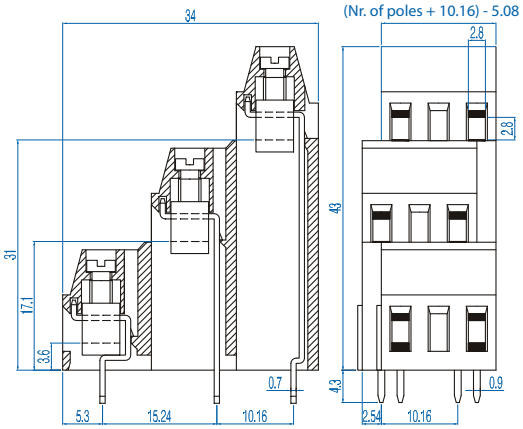

①16A Factory Wiring - UL

We still offer our original line of Printed Circuit Board Terminal Blocks.

Why is this good?

- Wider Selection & Availability
- Retain Original Circuit Designs
- Convenience

Ask your Altech Sales Representative for more information.

The Choice is Yours!

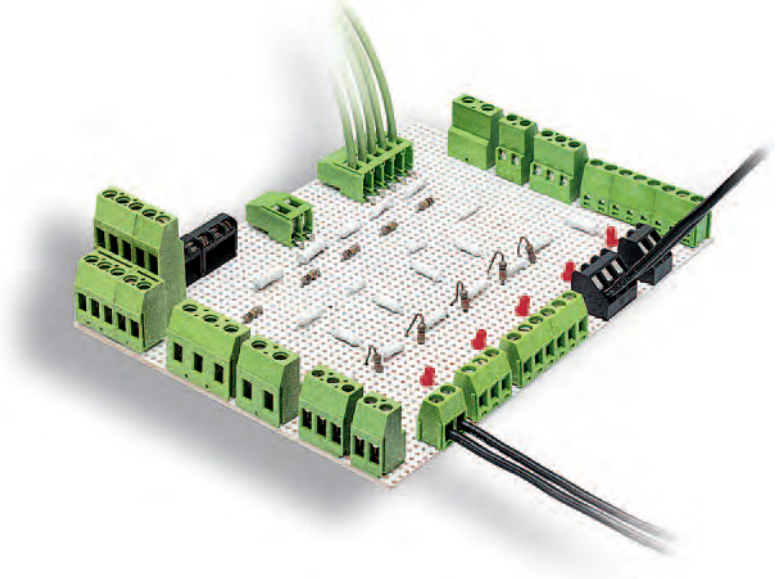

Because you can never have 2 many choices!

See Next Page

Original Printed Circuit Board Terminal Blocks

Fixed Printed Circuit
US Pin Spacing
Tubular Screw Clamp

AKZ500	Front Wire Entry
AK(Z)505	Top Wire Entry
AKZ120	Front Wire Entry
AKZ125	Top Wire Entry
AK(Z)110	Front Wire Entry

Fixed Printed Circuit
US Pin Spacing
Screw-Cage Clamp

AKZ300	45° Wire Entry
AKZ250	Front Wire Entry
AKZ350	Front Wire Entry
AKZ351	Front Wire Entry
AKZ700	Front Wire Entry
AKZ705	Top Wire Entry
AKZ750	Front Wire Entry
AKZ710	Front Wire Entry
AKZ800	Front Wire Entry
AKZ850	Front Wire Entry

Fixed Printed Circuit
US Pin Spacing
Dual Pin Screwless Spring Clamp

AK(Z)3000	45° Wire Entry without Lever
AK(Z)3001KD	45° Wire Entry with Grooved Push lever
AK(Z)3001FD	with Flat Push Lever

Pluggable Printed Circuit
US Pin Spacing
Tubular Screw Clamp Plug and Pin Headers

AK(Z)130	Modular Plug
AK(Z)132	Single Mold Plug
STL(Z)130	Straight Pin Header
STL(Z)140	Right Angle Pin Header
STL(Z)132	Straight Pin Header

Mini Pluggable Printed Circuit
US Pin Spacing
Screw-Cage Clamp Plug and Headers

AKZ1550	Wire Entry in Same Direction as Plug-In
STLZ1550-W	Horizontal - Closed End
STLZ1555-W	Vertical - Closed End

Standard Pluggable Printed Circuit
US Pin Spacing
Screw-Cage Clamp Plug

AKZ950	Wire Entry in Same Direction as Plug-In
AKZ960	Plug
BU02	Wire Entry Perpendicular to Plug-In
BU04	Wire Entry Perpendicular to Plug-In
AKZ1200	Wire Entry and Screws on Same Side as Plug-In

Standard Pluggable Printed Circuit
US Pin Spacing
Headers

STLZ950-W	Horizontal - Closed Ends
STLZ950-O	Horizontal - Open Ends
STLZ11-O	Horizontal - Open Ends
STLZ955-W	Vertical - Closed Ends
STLZ955-O	Vertical - Open Ends
STLZ990-W	Header, 45° - Closed Ends
STLZ990-O	Header, 45° - Open Ends
STLZ960-W	Horizontal Header - Closed Ends
STLZ965-W	Vertical Header - Closed Ends

Standard Pluggable Printed Circuit
US Pin Spacing
Double Level Headers

STLZ970-0	Horizontal - Open Ends
STLZ975-0	Vertical - Open Ends

Fixed Printed Circuit
Metric Pin Spacing
Tubular Screw Clamp

AK550	Front Wire Entry
AK555	Top Wire Entry
AK500	Front Wire Entry
AK505	Top Wire Entry
AK100	Front Wire Entry
AK105	Top Wire Entry
AK110	Front Wire Entry
AK115	Top Wire Entry
AK600	Front Wire Entry

Fixed Printed Circuit
Metric Pin Spacing
Screw-Cage Clamp

AK300	45° Wire Entry
AK(Z)250	Front Wire Entry
AK350	Front Wire Entry
AK351	Front Wire Entry
AK700	Front Wire Entry
AK705	Top Wire Entry
AK750	Top Wire Entry
AK790	Front Wire Entry
AK793	Front Wire Entry
AK710	Front Wire Entry
AK800	Front Wire Entry
AK850	Front Wire Entry

Fixed Printed Circuit
Metric Pin Spacing
Dual Pin Screwless Spring Clamp

AK3000	45° Wire Entry without Lever
AK3001KD	45° Wire Entry with Grooved Push Lever
AK3001FD	45° Wire Entry with Flat Push Lever

Pluggable Printed Circuit
Metric Pin Spacing
Tubular Screw Clamp Plug and Pin Headers

AK130	Modular Plug
AK132	Single Mold Plug
STL130	Straight Pin Header
STL140	Right Angle Pin Header
STL132	Straight Pin Header

Standard Pluggable Printed Circuit
Metric Pin Spacing
Screw-Cage Clamp Plug

AK950	Wire Entry in Same Direction as Plug-in
BU06	Wire Entry Perpendicular to Plug-in
BU08	Wire Entry Perpendicular to Plug-in

Pluggable Printed Circuit
Metric Pin Spacing
Headers

STL950-W	Horizontal - Closed Ends
STL950-O	Horizontal - Open Ends
STL955-W	Vertical - Closed Ends
STL955-O	Vertical - Open Ends

Ask your Altech Sales Representative for more information.

Hot Stamp Printing

For high volume requirements or when it is impractical to apply PSA Marking Labels, use Hot Stamp Imprinting to provide positive circuit identification for Fixed and Pluggable Printed Circuit
Terminal Blocks. Properly identified circuits increase wiring efficiency, save installation time and make wire hook-up, system modifications and trouble shooting quick and easy.

Hot Stamp Imprinting provides a permanent marking which will not rub, wear or wash off even when solvents are present.

Standard or custom imprint sequences are available for 2 to 24 pole positions. Imprints are centered above the wire entry. A setup fee applies.

Standard Imprint

- Character Style example: LNLG
- Character Size: 8 Pt., 2.4mm (3/32 in.) high
- Standard Imprint Color: Black on Green
- Housing; White on Gray Housing
- Optional Imprint Color: White on Green Housing

Imprint Ordering

Standard Imprints can be specified and ordered by adding the required suffix after the Cat. No. and Type designation. Simply select the appropriate Ordering Suffix for the required Imprint Sequence.

Hot Stamp Imprints up to 12 poles are standard for US (inch) and metric (mm) spacings. For pricing purposes, they are considered to be one assembly.

Imprints with 13-24 poles are considered to be (2) assemblies. For pricing purposes, they are considered to be two assemblies.

Consult Altech for Hot Stamp Imprinting pricing, minimum order quantities and applicable lot charges.

Custom Imprints

Special number sequences and character combinations including letters, symbols and numbers are available. To order special sequences or combinations send us your imprint schedule. For die charges and minimum order quantities for your custom imprints, please consult Altech.

STANDARD IMPRINT

i A	(1, 2, 3, 4, ...)	Consecutive, Ascending, Left to Right	1 2 3 4
i B	(... 4, 3, 2, 1)	Consecutive, Descending Left to Right	4 3 2 1
i C	(1, 2, 3, 4, ...)	Upside Down, Consecutive Descending, Left to Right	1 2 3 4
i D	(... 4, 3, 2, 1)	Updside Down, Consecutive Ascending, Left to Right	4 3 2 1

***Standard Imprint Example*:**
13 pole, Type MV-4612 Printed Circuit Terminal Block to be imprinted upside down with descending, consecutive numbers reading left to right should be ordered as below:

Type
MV-4612iA