CUI INC®



# MODEL: CPM-2F | DESCRIPTION: 6.0 A PELTIER UNIT

## FEATURES

- arcTEC™ structure
- better seal structure for water resistance and absorption of thermal stress
- easy installation
- no screws to tighten result in better heat absorption and maximum performance

RoHS

## MODEL

| MODEL | input voltage[1] max (V) | input current max (A) | output Qmax[2] $T_h$=50°C (W) | output ΔTmax[2] $T_h$=50°C (°C) |
|---|---|---|---|---|
| CPM-2F | 12 | 6 | 46 | 73 |

Notes:
1. at inverse voltage, "cold side plate" becomes hot side plate
2. maximum cooling capacity at $I_{max}$, $V_{max}$, and ΔT=0°C
3. maximum temperature difference at $I_{max}$, $V_{max}$, and Q=0W (maximum parameters are measured in a vacuum)

## SPECIFICATIONS

| parameter | conditions/description | min | typ | max | units |
|---|---|---|---|---|---|
| internal resistance[4] | | 1.85 | | 2.35 | Ω |
| cold side plate | | -20 | | 60 | °C |

Notes: 4. measured by AC 4-terminal method at 25°C

## SAFETY & COMPLIANCE

| parameter | conditions/description | min | typ | max | units |
|---|---|---|---|---|---|
| isolation voltage | for 1 second | | | 1,200 | Vac |
| insulation resistance | input to output at 250 Vdc | 10 | | | MΩ |
| RoHS | 2011/65/EU | | | | |

## ENVIRONMENTAL

| parameter | conditions/description | min | typ | max | units |
|---|---|---|---|---|---|
| operating temperature | | 0 | | 35 | °C |
| storage temperature | | -20 | | 70 | °C |
| operating humidity | | 30 | | 85 | % |
| storage humidity | | 10 | | 90 | % |

For further information and product selection refer to peltier applicaftion notes.pdf

## CPM-2F PERFORMANCE (Th=50°C)

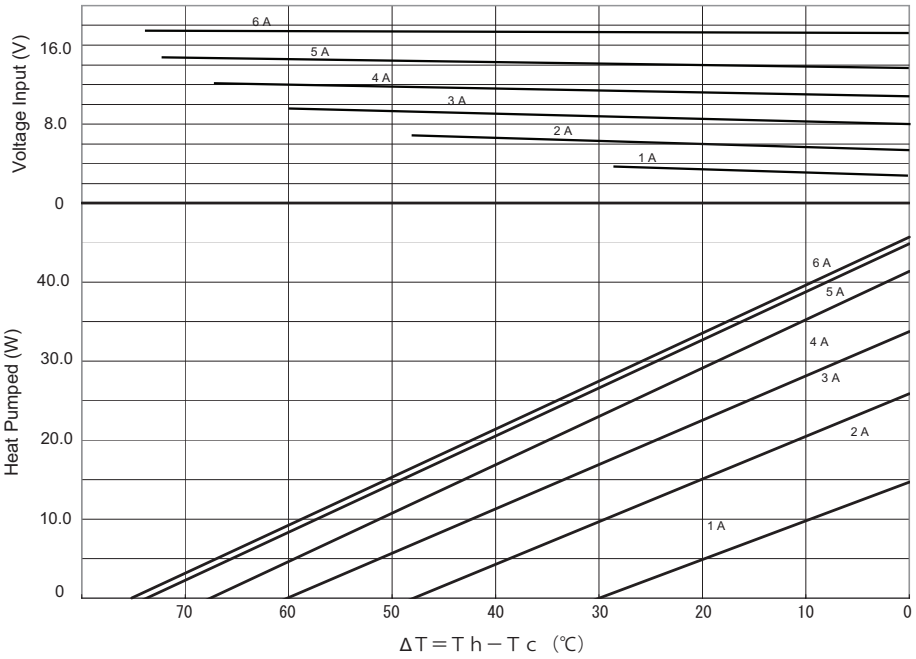


## MECHANICAL

| parameter | conditions/description | min | typ | max | units |
|---|---|---|---|---|---|
| weight | | | 200 | | g |
| cooling medium | aluminum | | | | |
| heat radiation medium | aluminum | | | | |

## MECHANICAL DRAWING

units: mm
tolerance: ±0.3 mm

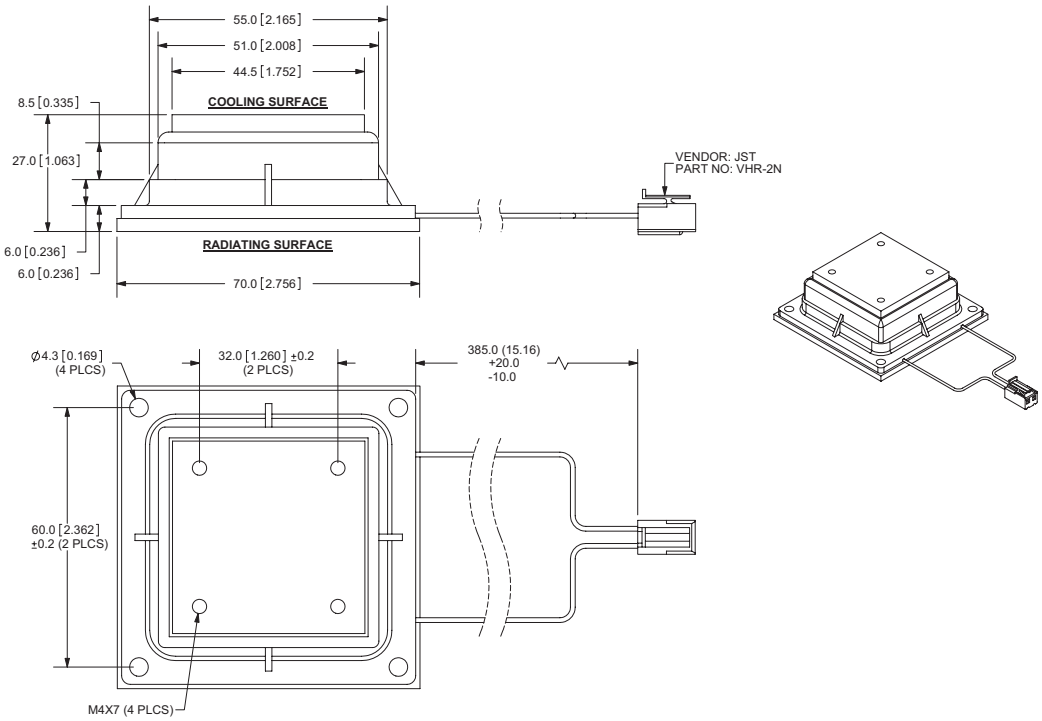

For more information, please visit the product page.



## REVISION HISTORY

| rev. | description | date |
|---|---|---|
| 1.0 | initial release | 07/09/2008 |
| 1.01 | applied new template | 05/07/2012 |
| 1.02 | updated datasheet | 09/25/2017 |

The revision history provided is for informational purposes only and is believed to be accurate.

**Headquarters**
20050 SW 112th Ave.
Tualatin, OR 97062
**800.275.4899**

Fax 503.612.2383
**cui**.com
techsupport@cui.com

CUI offers a one (1) year limited warranty. Complete warranty information is listed on our website.

CUI reserves the right to make changes to the product at any time without notice. Information provided by CUI is believed to be accurate and reliable. However, no responsibility is assumed by CUI for its use, nor for any infringements of patents or other rights of third parties which may result from its use.

CUI products are not authorized or warranted for use as critical components in equipment that requires an extremely high level of reliability. A critical component is any component of a life support device or system whose failure to perform can be reasonably expected to cause the failure of the life support device or system, or to affect its safety or effectiveness.