DRAWING No.:- H2087-XX	IF IN DOUBT - ASK	©	NOT TO SCALE	THIRD ANGLE PROJECTION	ALL DIMENSIONS IN mm

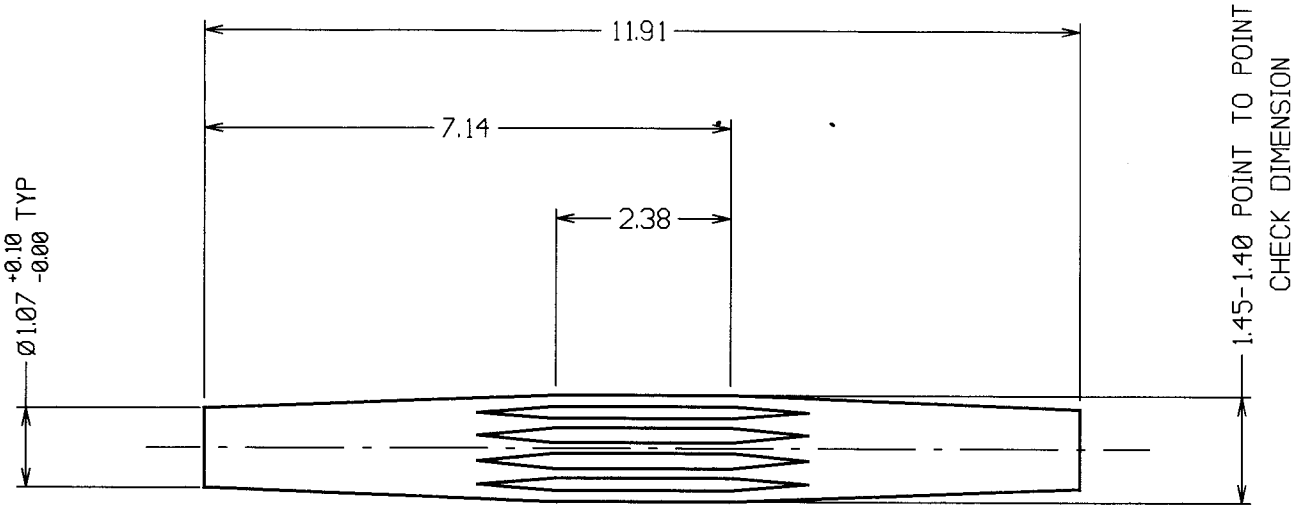

NOTES:
1. DIMENSIONS TO APPLY AFTER PLATING.

ISS.	DATE	C/N
15	10.07.95	2981
14	07.08.90	1684
13	18.05.90	1650
12	19.12.88	1384
11	30.05.86	982

APPROVED:
CHECKED: ATF
DRAWN: W. BOURNE
CUSTOMER REF.
ASSEMBLY DRG:

PART No.	FINISH
H2087-01	F0101 (90/10 TIN/LEAD)
H2087-00	-----

HARWIN

HARWIN INC
U.S.A.
TEL: (812) 285 0055
FAX: (812) 285 0056

HARWIN PLC
U.K.
TEL: (01705) 370451
FAX: (01705) 324010

HARWIN PTE
SINGAPORE
TEL: 7794909
FAX: 7793868

TOLERANCES
X. = ±1mm
X.X = ±0.25mm
X.XX = ±0.10mm
X.XXX = ±0.01mm
ANGLES = ±1°
UNLESS STATED

MATERIAL: BRM 1015 CZ124
FINISH: SEE ABOVE
S/AREA: 52.6 mm²

TITLE: SOLDER PIN
DRAWING NUMBER: H2087-XX
SHT 1 OF 1