MRF448

The RF Line NPN Silicon Power Transistor
250W, 30MHz, 50V

M/A-COM Products
Released - Rev. 07.07

Designed primarily for high–voltage applications as a high–power linear amplifiers from 2.0 to 30 MHz. Ideal for marine and base station equipment.

- Specified 50 V, 30 MHz characteristics
  - Output power = 250 W
  - Minimum gain = 12 dB
  - Efficiency = 45%
- Intermodulation distortion @ 250 W (PEP) —
  - IMD = –30 dB (max)
- 100% tested for load mismatch at all phase angles with 3:1 VSWR

Product Image

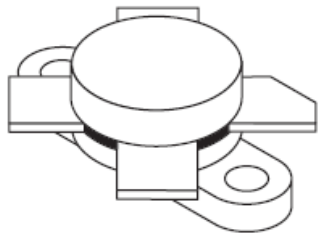

CASE 211–11, STYLE 1

MAXIMUM RATINGS

Rating	Symbol	Value	Unit
Collector–Emitter Voltage	V_{CEO}	50	Vdc
Collector–Base Voltage	V_{CBO}	100	Vdc
Emitter–Base Voltage	V_{EBO}	4.0	Vdc
Collector Current — Continuous	I_C	16	Adc
Withstand Current — 10 s	—	20	Adc
Total Device Dissipation @ T_C = 25°C (1) Derate above 25°C	P_D	290 1.67	Watts W/°C
Storage Temperature Range	T_{stg}	–65 to +150	°C

THERMAL CHARACTERISTICS

Characteristic	Symbol	Max	Unit
Thermal Resistance, Junction to Case	$R_{\theta JC}$	0.6	°C/W

ELECTRICAL CHARACTERISTICS (T_C = 25°C unless otherwise noted.)

Characteristic	Symbol	Min	Typ	Max	Unit
OFF CHARACTERISTICS					
Collector–Emitter Breakdown Voltage (I_C = 200 mAdc, I_B = 0)	$V_{(BR)CEO}$	50	—	—	Vdc
Collector–Emitter Breakdown Voltage (I_C = 100 mAdc, V_{BE} = 0)	$V_{(BR)CES}$	100	—	—	Vdc
Collector–Base Breakdown Voltage (I_C = 100 mAdc, I_E = 0)	$V_{(BR)CBO}$	100	—	—	Vdc
Emitter–Base Breakdown Voltage (I_E = 10 mAdc, I_C = 0)	$V_{(BR)EBO}$	4.0	—	—	Vdc

NOTE:
1. P_D is a measurement reflecting short term maximum condition. See SOAR curve for operating conditions.

(continued)

ADVANCED: Data Sheets contain information regarding a product M/A-COM Technology Solutions is considering for development. Performance is based on target specifications, simulated results, and/or prototype measurements. Commitment to develop is not guaranteed.
PRELIMINARY: Data Sheets contain information regarding a product M/A-COM Technology Solutions has under development. Performance is based on engineering tests. Specifications are typical. Mechanical outline has been fixed. Engineering samples and/or test data may be available. Commitment to produce in volume is not guaranteed.

- **North America** Tel: 800.366.2266 / Fax: 978.366.2266
- **Europe** Tel: 44.1908.574.200 / Fax: 44.1908.574.300
- **Asia/Pacific** Tel: 81.44.844.8296 / Fax: 81.44.844.8298
  Visit www.macomtech.com for additional data sheets and product information.

M/A-COM Technology Solutions Inc. and its affiliates reserve the right to make changes to the product(s) or information contained herein without notice.

ELECTRICAL CHARACTERISTICS — continued (T_C = 25°C unless otherwise noted.)

Characteristic	Symbol	Min	Typ	Max	Unit
ON CHARACTERISTICS					
DC Current Gain (I_C = 5.0 Adc, V_{CE} = 10 Vdc)	h_{FE}	10	30	—	—
DYNAMIC CHARACTERISTICS					
Output Capacitance (V_{CB} = 50 Vdc, I_E = 0, f = 1.0 MHz)	C_{ob}	—	350	450	pF
FUNCTIONAL TESTS					
Common–Emitter Amplifier Power Gain (V_{CC} = 50 Vdc, P_{out} = 250 W CW, f = 30 MHz, I_{CQ} = 250 mA)	G_{PE}	12	14	—	dB
Collector Efficiency (V_{CC} = 50 Vdc, P_{out} = 250 W, f = 30 MHz, I_{CQ} = 250 mA)	η	— —	45 65	— —	% (PEP) % (CW)
Intermodulation Distortion (2) (V_{CE} = 50 Vdc, P_{out} = 250 W (PEP), I_{CQ} = 250 mA, f = 30 MHz)	IMD	—	–33	–30	dB
Electrical Ruggedness (V_{CC} = 50 Vdc, P_{out} = 250 W CW, f = 30 MHz, VSWR 3:1 at all Phase Angles)	ψ	No Degradation in Output Power			

NOTE:
2. To Mil–Std–1311 Version A, Test Method 2204, Two Tone, Reference each Tone.

ADVANCED: Data Sheets contain information regarding a product M/A-COM Technology Solutions is considering for development. Performance is based on target specifications, simulated results, and/or prototype measurements. Commitment to develop is not guaranteed.
PRELIMINARY: Data Sheets contain information regarding a product M/A-COM Technology Solutions has under development. Performance is based on engineering tests. Specifications are typical. Mechanical outline has been fixed. Engineering samples and/or test data may be available. Commitment to produce in volume is not guaranteed.

• **North America** Tel: 800.366.2266 / Fax: 978.366.2266
• **Europe** Tel: 44.1908.574.200 / Fax: 44.1908.574.300
• **Asia/Pacific** Tel: 81.44.844.8296 / Fax: 81.44.844.8298
Visit www.macomtech.com for additional data sheets and product information.

M/A-COM Technology Solutions Inc. and its affiliates reserve the right to make changes to the product(s) or information contained herein without notice.

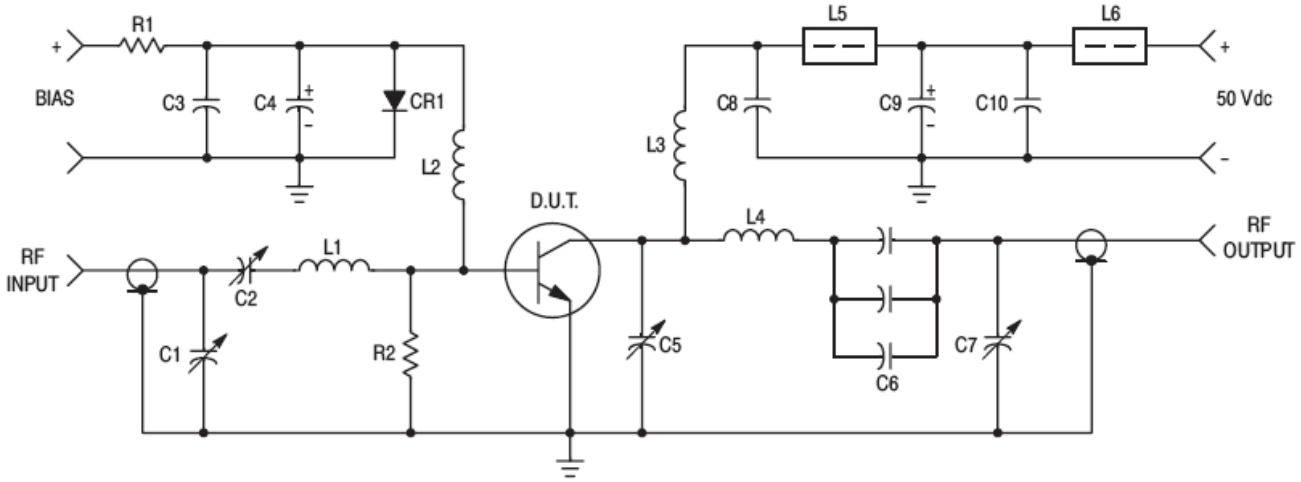

C1, C2, C5, C7 — 170–780 pF, Arco 469
C3, C8, C9 — 0.1 µF, 100 V Erie
C4 — 500 µF @ 6.0 V
C6 — 360 pF, 3 x 120 pF 3.0 kV in parallel
C10 — 10 µF, 100 V
R1 — 10 Ω, 10 Watt
R2 — 10 Ω, 1.0 Watt

CR1 — 1N4997 or equivalent
L1 — 3 Turns, #16 Wire, 0.4″ I.D., 0.3″ Long
L2 — 0.8 µH, Ohmite Z–235 or equivalent
L3 — 12 Turns, #16 Enameled Wire Closewound 0.25″ I.D.
L4 — 4 Turns, 1/8″ Copper Tubing, 0.6″ I.D., 1.0″ Long
L5, L6 — 2.0 µH, Fair–Rite 2643021801 Ferrite bead each or equivalent

Figure 1. 30 MHz Test Circuit Schematic

ADVANCED: Data Sheets contain information regarding a product M/A-COM Technology Solutions is considering for development. Performance is based on target specifications, simulated results, and/or prototype measurements. Commitment to develop is not guaranteed.
PRELIMINARY: Data Sheets contain information regarding a product M/A-COM Technology Solutions has under development. Performance is based on engineering tests. Specifications are typical. Mechanical outline has been fixed. Engineering samples and/or test data may be available. Commitment to produce in volume is not guaranteed.

- **North America** Tel: 800.366.2266 / Fax: 978.366.2266
- **Europe** Tel: 44.1908.574.200 / Fax: 44.1908.574.300
- **Asia/Pacific** Tel: 81.44.844.8296 / Fax: 81.44.844.8298
  Visit www.macomtech.com for additional data sheets and product information.

M/A-COM Technology Solutions Inc. and its affiliates reserve the right to make changes to the product(s) or information contained herein without notice.

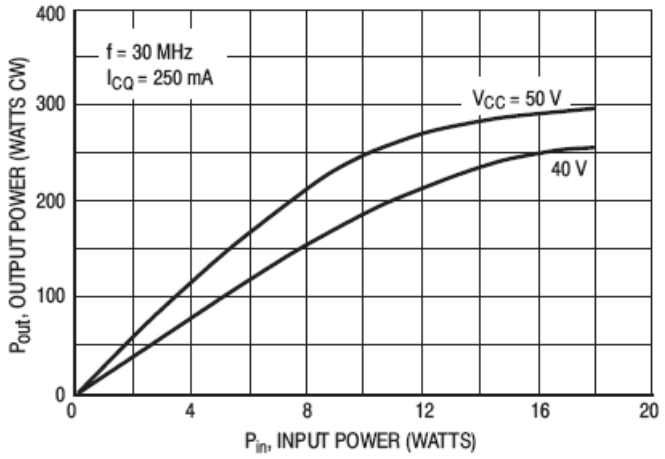

Figure 2. Output Power versus Input Power

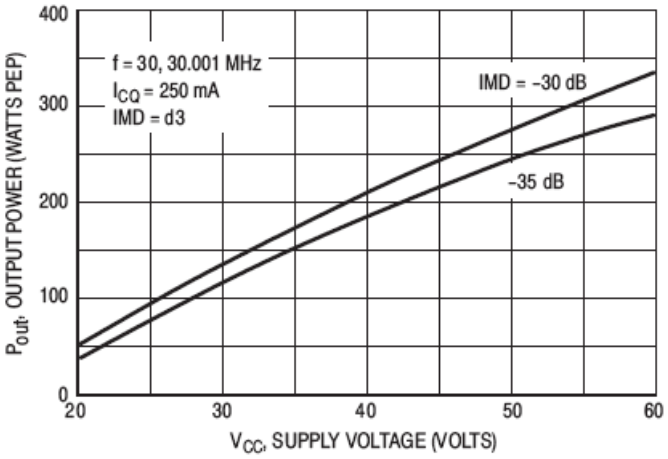

Figure 3. Output Power versus Supply Voltage

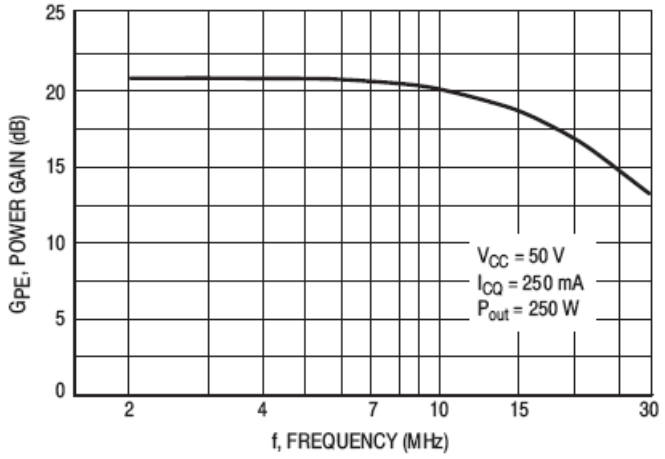

Figure 4. Power Gain versus Frequency

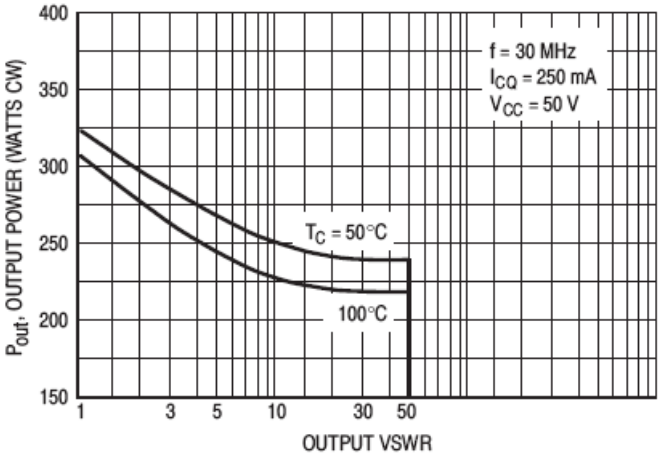

Figure 5. RF SOAR (Class AB)
P_{out} versus Output VSWR

ADVANCED: Data Sheets contain information regarding a product M/A-COM Technology Solutions is considering for development. Performance is based on target specifications, simulated results, and/or prototype measurements. Commitment to develop is not guaranteed.
PRELIMINARY: Data Sheets contain information regarding a product M/A-COM Technology Solutions has under development. Performance is based on engineering tests. Specifications are typical. Mechanical outline has been fixed. Engineering samples and/or test data may be available. Commitment to produce in volume is not guaranteed.

- **North America** Tel: 800.366.2266 / Fax: 978.366.2266
- **Europe** Tel: 44.1908.574.200 / Fax: 44.1908.574.300
- **Asia/Pacific** Tel: 81.44.844.8296 / Fax: 81.44.844.8298
  Visit www.macomtech.com for additional data sheets and product information.

M/A-COM Technology Solutions Inc. and its affiliates reserve the right to make changes to the product(s) or information contained herein without notice.

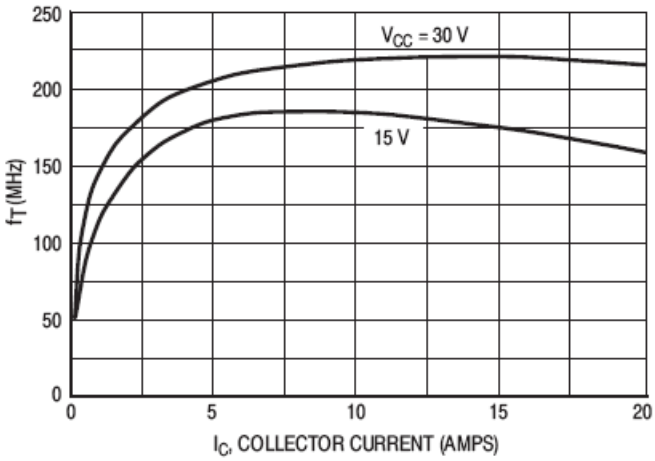

Figure 6. f_T versus Collector Current

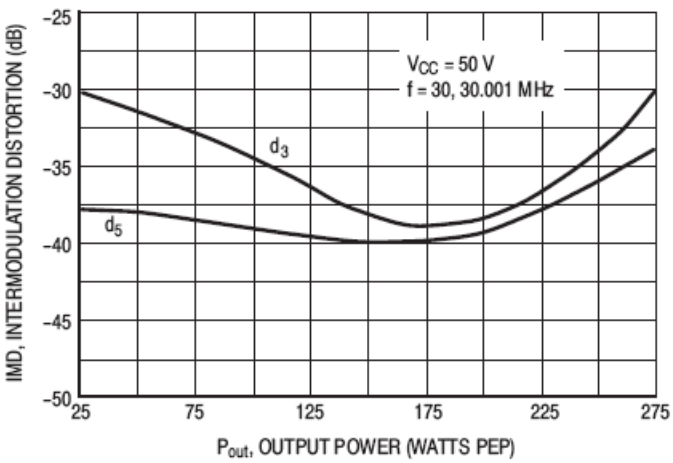

Figure 7. IMD versus P_{out}

ADVANCED: Data Sheets contain information regarding a product M/A-COM Technology Solutions is considering for development. Performance is based on target specifications, simulated results, and/or prototype measurements. Commitment to develop is not guaranteed.
PRELIMINARY: Data Sheets contain information regarding a product M/A-COM Technology Solutions has under development. Performance is based on engineering tests. Specifications are typical. Mechanical outline has been fixed. Engineering samples and/or test data may be available. Commitment to produce in volume is not guaranteed.

- **North America** Tel: 800.366.2266 / Fax: 978.366.2266
- **Europe** Tel: 44.1908.574.200 / Fax: 44.1908.574.300
- **Asia/Pacific** Tel: 81.44.844.8296 / Fax: 81.44.844.8298
  Visit www.macomtech.com for additional data sheets and product information.

M/A-COM Technology Solutions Inc. and its affiliates reserve the right to make changes to the product(s) or information contained herein without notice.

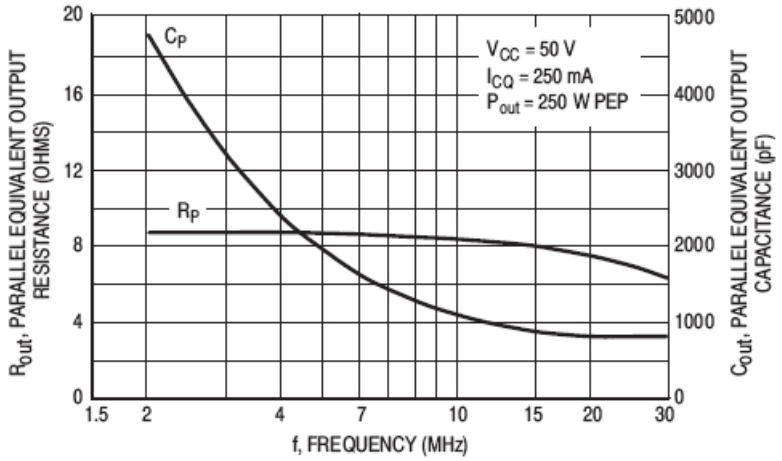

Figure 8. Output Resistance and Capacitance versus Frequency

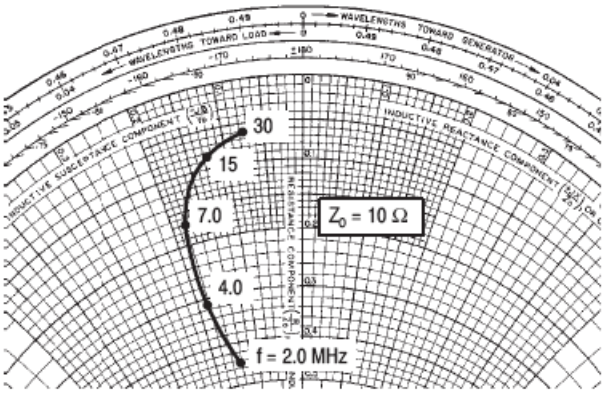

V_{CC} = 50 V
I_{CQ} = 150 mA
P_{out} = 250 W PEP

f MHz	Z_{in} Ohms
2.0	4.50 – j1.40
4.0	3.10 – j1.80
7.0	1.70 – j1.75
15	0.80 – j1.25
30	0.60 – j0.75

Figure 9. Series Equivalent Impedance

ADVANCED: Data Sheets contain information regarding a product M/A-COM Technology Solutions is considering for development. Performance is based on target specifications, simulated results, and/or prototype measurements. Commitment to develop is not guaranteed.
PRELIMINARY: Data Sheets contain information regarding a product M/A-COM Technology Solutions has under development. Performance is based on engineering tests. Specifications are typical. Mechanical outline has been fixed. Engineering samples and/or test data may be available. Commitment to produce in volume is not guaranteed.

- **North America** Tel: 800.366.2266 / Fax: 978.366.2266
- **Europe** Tel: 44.1908.574.200 / Fax: 44.1908.574.300
- **Asia/Pacific** Tel: 81.44.844.8296 / Fax: 81.44.844.8298
  Visit www.macomtech.com for additional data sheets and product information.

M/A-COM Technology Solutions Inc. and its affiliates reserve the right to make changes to the product(s) or information contained herein without notice.

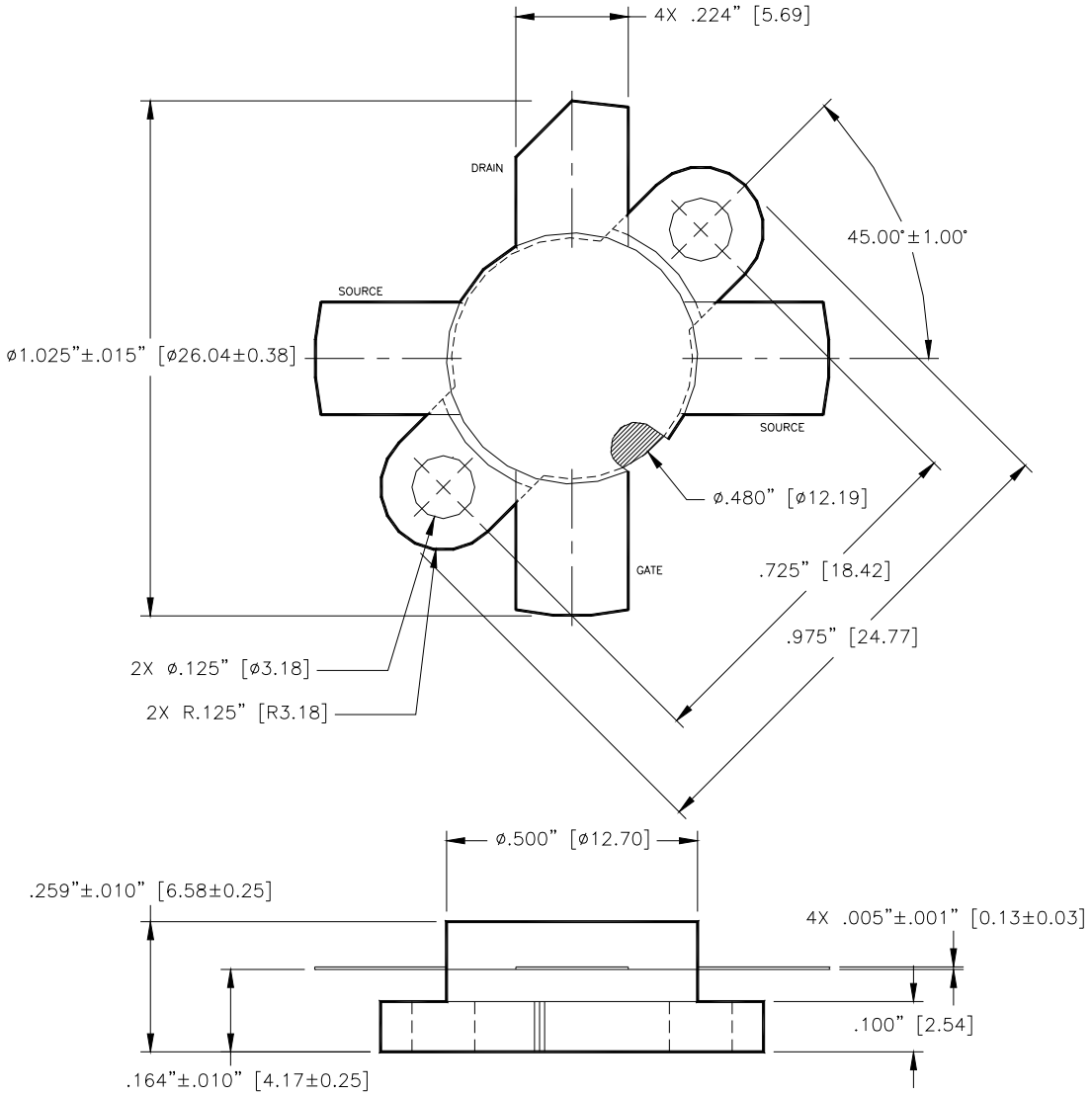

Unless otherwise noted, tolerances are inches ±.005" [millimeters ±0.13mm]

ADVANCED: Data Sheets contain information regarding a product M/A-COM Technology Solutions is considering for development. Performance is based on target specifications, simulated results, and/or prototype measurements. Commitment to develop is not guaranteed.
PRELIMINARY: Data Sheets contain information regarding a product M/A-COM Technology Solutions has under development. Performance is based on engineering tests. Specifications are typical. Mechanical outline has been fixed. Engineering samples and/or test data may be available. Commitment to produce in volume is not guaranteed.

- **North America** Tel: 800.366.2266 / Fax: 978.366.2266
- **Europe** Tel: 44.1908.574.200 / Fax: 44.1908.574.300
- **Asia/Pacific** Tel: 81.44.844.8296 / Fax: 81.44.844.8298
  Visit www.macomtech.com for additional data sheets and product information.

M/A-COM Technology Solutions Inc. and its affiliates reserve the right to make changes to the product(s) or information contained herein without notice.