MagAlpha MA100

Angular Sensor for Brushless Motor Commutation with Side-Shaft Positioning Capability

The Future of Analog IC Technology®

DESCRIPTION

The MagAlpha MA100 magnetic sensor is an all-in-one solution designed to replace Hall switches for 3-phase block commutation in brushless DC motors. The MA100 detects the absolute angular position of a permanent magnet, typically a diametrically magnetized cylinder attached to the rotor. The data acquisition and processing is extremely fast, allowing for accurate angle measurement at speeds from 0 to 100,000 RPM.

The MA100 supports a wide range of magnetic field strengths and spatial configurations, which help relax mechanical tolerances and simplify system design. Both end-of-shaft magnet and off-axis magnet positioning ("side-shaft" mounting) topologies are supported.

Please See Position Sensor Design Support for All Supporting Software

FEATURES

- UVW Signals for Block Commutation
- 11-Bit Resolution Absolute Angle Encoder
- 500kHz Refresh Rate
- Ultra-Low Latency: 3µs
- SPI Serial Interface
- Built-In Linearization for Side-Shaft Topologies
- 3.3V, 7.7mA Supply
- Available in a QFN-16 (3mmx3mm) Package

APPLICATIONS

- PSM/BLDC Motors

All MPS parts are lead-free, halogen-free, and adhere to the RoHS directive. For MPS green status, please visit the MPS website under Quality Assurance. "MPS" and "The Future of Analog IC Technology" are registered trademarks of Monolithic Power Systems, Inc.

NOT RECOMMENDED FOR NEW DESIGNS REFER TO MA102

TYPICAL APPLICATION

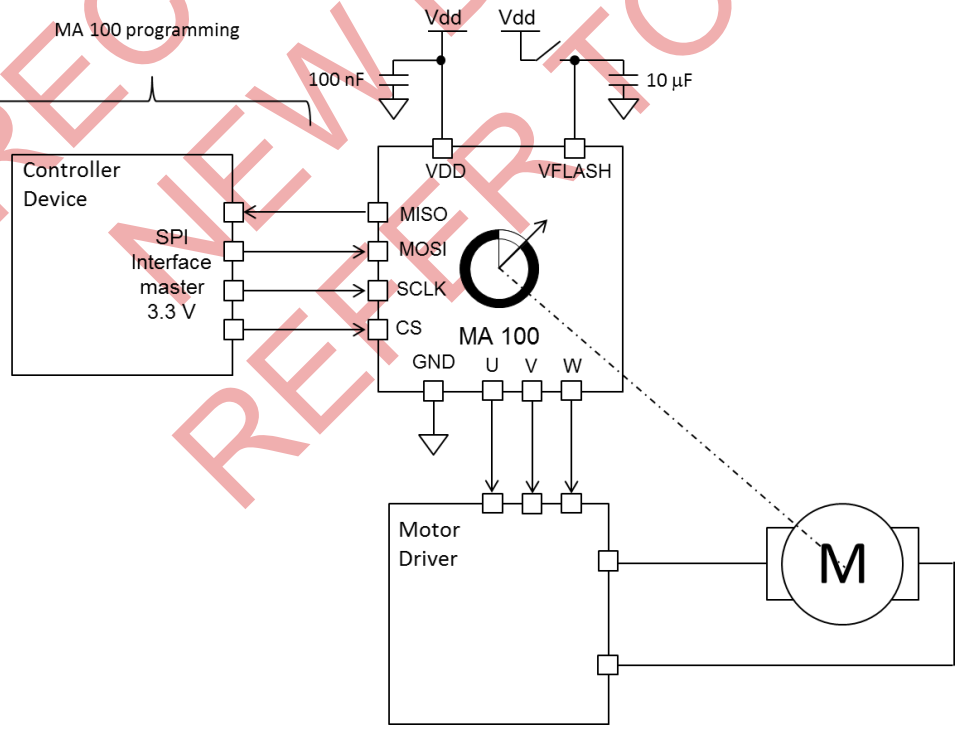

MPS Proprietary Information. Patent Protected. Unauthorized Photocopy and Duplication Prohibited.
© 2018 MPS. All Rights Reserved.

ORDERING INFORMATION

Part Number*	Package	Top Marking
MA100GQ	QFN-16 (3mmx3mm)	*See Below*

* For Tape & Reel, add suffix –Z (e.g. MA100GQ–Z)

TOP MARKING

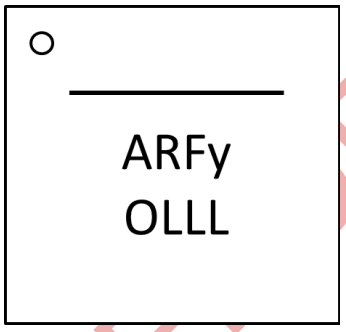

y: year code
O: Optional marking
LLL: Lot number

PACKAGE REFERENCE

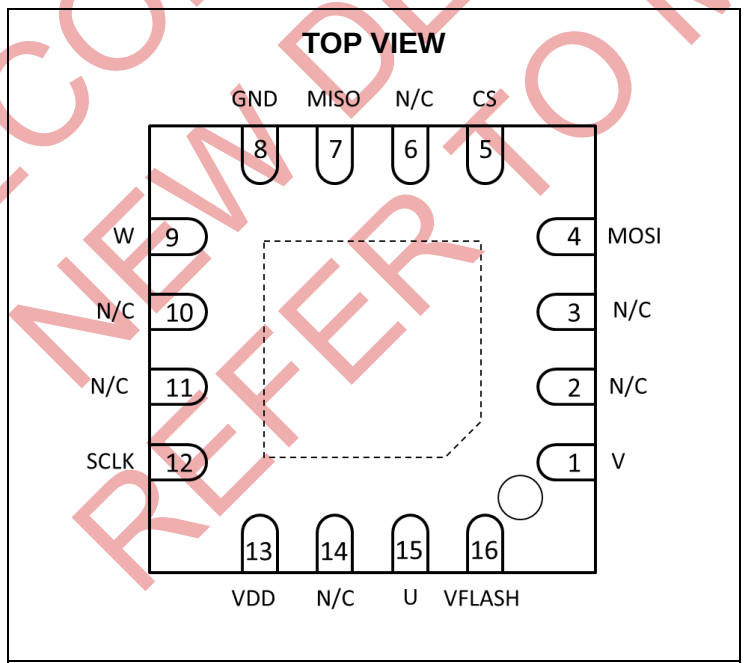

QFN-16 (3mmx3mm)

NOT RECOMMENDED FOR NEW DESIGNS REFER TO MA102

MPS Proprietary Information. Patent Protected. Unauthorized Photocopy and Duplication Prohibited.
© 2018 MPS. All Rights Reserved.

ABSOLUTE MAXIMUM RATINGS (1)

Supply voltage (continuous)..... -0.5V to +3.8V
Supply voltage short term ..... -0.5V to +4.1V
I/O pin voltage ..... -0.5V to 3.8V
Continuous power dissipation (T_A = +25°C)(2)
.....2.5W

Thermal Resistance (3)	θ_{JA}	θ_{JC}
QFN-16 (3mmx3mm)	50	12 °C/W

NOTES:

1) Exceeding these ratings may damage the device.
2) The maximum allowable power dissipation is a function of the maximum junction temperature T_J (MAX), the junction-to-ambient thermal resistance θ_{JA}, and the ambient temperature T_A. The maximum allowable continuous power dissipation at any ambient temperature is calculated by P_D (MAX) = (T_J (MAX)-T_A)/θ_{JA}.
3) Measured on JESD51-7, 4-layer PCB.

NOT RECOMMENDED FOR NEW DESIGNS REFER TO MA102

MPS Proprietary Information. Patent Protected. Unauthorized Photocopy and Duplication Prohibited.
© 2018 MPS. All Rights Reserved.

ELECTRICAL CHARACTERISTICS

Parameter	Symbol	Condition	Min	Typ	Max	Units
Operating Conditions						
Supply voltage	VDD		3.0	3.3	3.6	V
Supply voltage for OTP flashing	V_{flash}		3.9	4.0	4.1	V
Supply current for OTP flashing(4)	I_{flash}		50		100	mA
Operating temperature	Top		-40		125	°C
Applied magnetic field	B		30	75		mT

NOTE:
4) Please see the OTP Programming section for more details about the supply circuits for OTP flashing.

NOT RECOMMENDED FOR NEW DESIGNS REFER TO MA102

MPS Proprietary Information. Patent Protected. Unauthorized Photocopy and Duplication Prohibited.
© 2018 MPS. All Rights Reserved.

ELECTRICAL CHARACTERISTICS *(continued)*

VDD = 3.3V, 50mT < B < 100mT, temp = -40°C to +125°C, unless otherwise noted.

Parameter	Symbol	Condition	Min	Typ	Max	Units
Sensor Output Specifications						
Power-up time(5)				2	3	ms
Supply current			6.0	7.7	8.8	mA
INL at 25°C		At room temperature over the field range	±0.9	±1.6	±2.0	deg
INL between -40°C to +125°C (5)		The largest value over the temperature range and field range	±0.5	±1.6	±2.5	deg
Output Drift						
Temperature induced(5)			-0.026		+0.026	deg/°C
Magnetic field induced(5)			-0.023		+0.023	deg/mT
Voltage supply induced(5)			-0.7		+0.7	deg/V
Absolute Output – Serial						
Data output length			8		8	bit
Refresh rate			488	524	558	kHz
Latency (6)		Measured at constant speed		3		µs
Resolution (3σ noise level)		Measured by averaging over all angles	8.0		8.0	bit
UVW						
Resolution of the edge position				8		bit
Jitter					1.4	deg
Hysteresis			0.2		0.27	deg
Digital I/O						
Threshold voltage high				1.75		V
Threshold voltage low				1.05		V
Rising edge slew rate		CL = 50pF		0.7		V/ns
Falling edge slew rate		CL = 50pF		0.7		V/ns
OTP Flash Timing						
Flashing time for one register (6)					2.6	ms
Period for multiple registers flashing(6)		Time between two successive flash commands	2.6			ms

NOTES:
5) Guaranteed by design.
6) Guaranteed by characteristic test.

NOT RECOMMENDED FOR NEW DESIGNS REFER TO MA102

MPS Proprietary Information. Patent Protected. Unauthorized Photocopy and Duplication Prohibited.
© 2018 MPS. All Rights Reserved.

TYPICAL CHARACTERISTICS

VDD = 3.3V, temp = 25°C, unless otherwise noted.

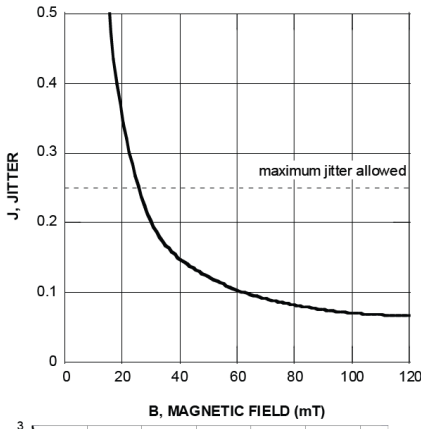

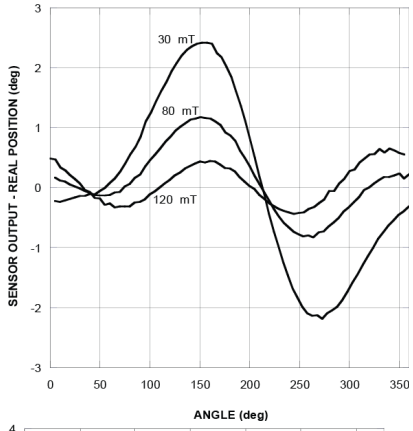

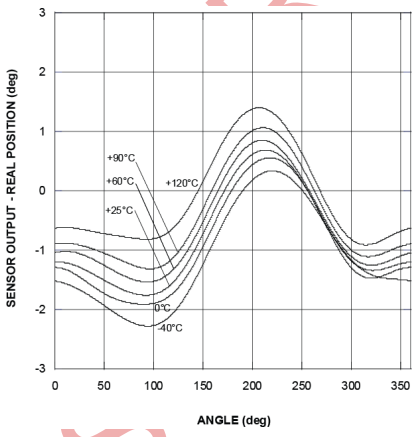

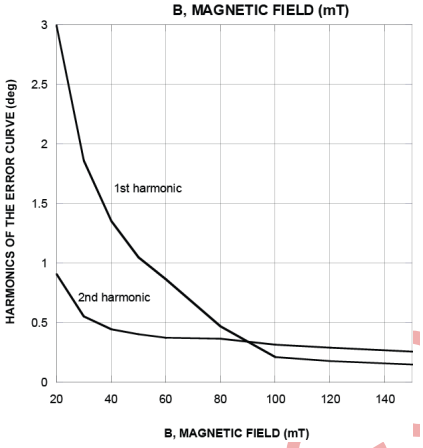

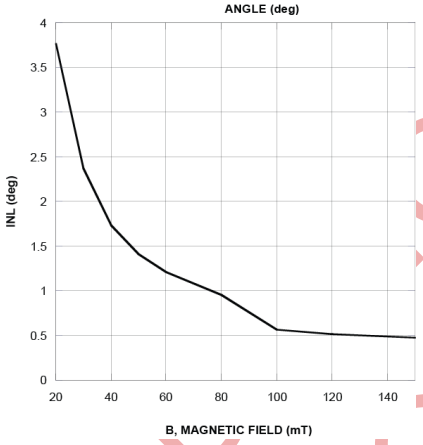

NOT RECOMMENDED FOR NEW DESIGNS
REFER TO MA102

MPS Proprietary Information. Patent Protected. Unauthorized Photocopy and Duplication Prohibited.
© 2018 MPS. All Rights Reserved.

PIN FUNCTIONS

Package Pin #	Name	Description
1	V	**Incremental output.**
2, 3, 6, 10, 11, 14	NC	**No connection.** Leave unconnected.
4	MOSI	**Data in.** Serial.
5	CS	**Chip select.** Serial.
7	MISO	**Data out.** Serial.
8	GND	**Ground.**
9	W	**Incremental output.**
12	SCLK	**Clock.** Serial.
13	VDD	**3.3V supply.**
15	U	**Incremental output.**
16	VFLASH	**Voltage supply for OTP flash.** Leave unconnected if not used

NOT RECOMMENDED FOR NEW DESIGNS REFER TO MA102

MPS Proprietary Information. Patent Protected. Unauthorized Photocopy and Duplication Prohibited.
© 2018 MPS. All Rights Reserved.

BLOCK DIAGRAM

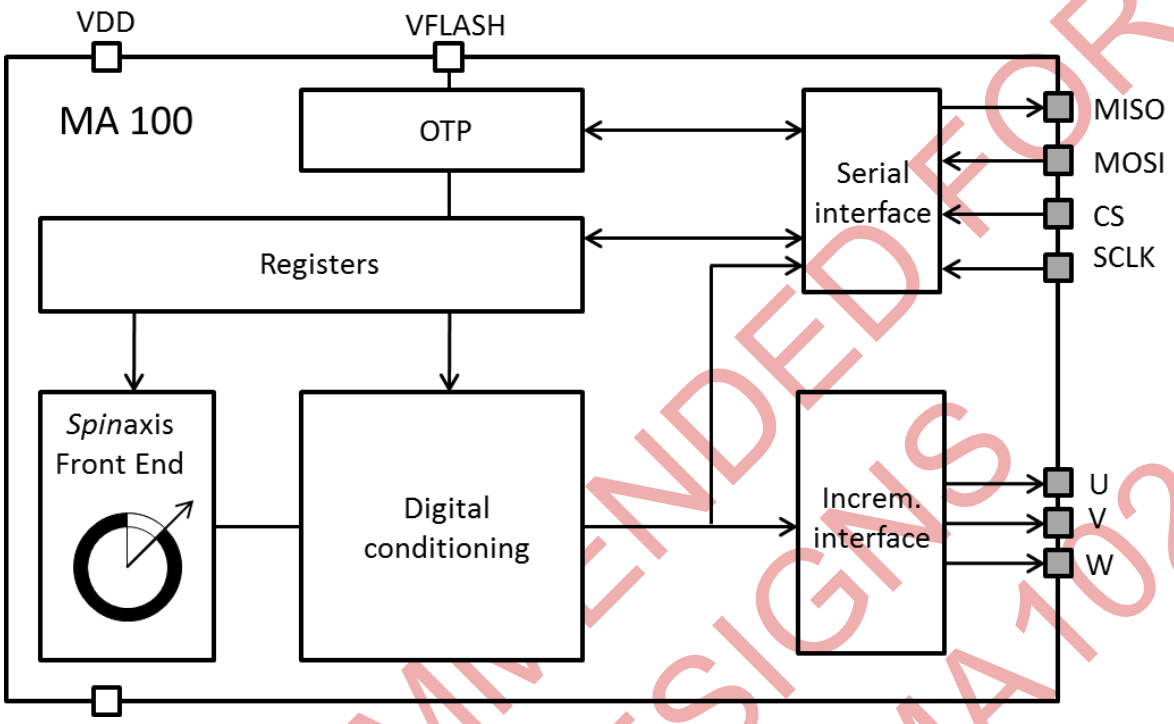

Figure 1: Functional Block Diagram

NOT RECOMMENDED FOR NEW DESIGNS REFER TO MA102

MPS Proprietary Information. Patent Protected. Unauthorized Photocopy and Duplication Prohibited.
© 2018 MPS. All Rights Reserved.

OPERATION

Timing of the Serial Interface

The data link is a 4-wire serial bus complying with the serial peripheral interface (SPI) usual convention (see Table 1 and Table 2). The MagAlpha sensor operates as a slave. During one transmission, a 16-bit word can be sent to the sensor MOSI and received from the sensor MISO simultaneously (see Figure 2).

Table 1: SPI Specification

SCLK idle state	High
SCLK readout edge	Rising
CS idle state	High
Data order	MSB first

Table 2: SPI Standard

CPOL	1
CPHA	1
MODE	3
DORD	0

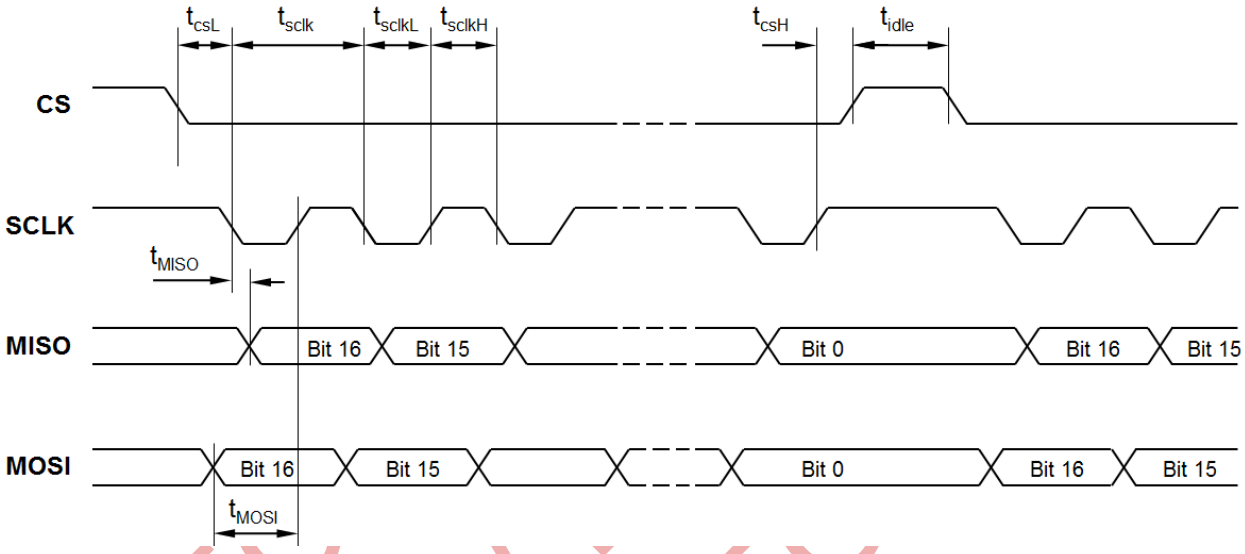

Figure 2: SPI Timing Diagram

Table 3: SPI Timing

Parameter	Description	Min	Max	Unit
t_{idle}	Time between two subsequent transmissions	50		ns
t_{csL}	Time between CS falling edge and SCLK falling edge	50		ns
t_{sclk}	SCLK period	40		ns
t_{sclkL}	Low level of SCLK signal	20		ns
t_{sclkH}	High level of SCLK signal	20		ns
t_{csH}	Time between SCLK rising edge and CS rising edge	25		ns
t_{MOSI}	Data input valid to SCLK reading edge	15		ns
t_{MISO}	SCLK setting edge to data output valid		15	ns

NOT RECOMMENDED FOR NEW DESIGN
REFER TO

MPS Proprietary Information. Patent Protected. Unauthorized Photocopy and Duplication Prohibited.
© 2018 MPS. All Rights Reserved.

Registers

Table 4: Register Map

No	Hex	Bin	Bit 7 MSB	Bit 6	Bit 5	Bit 4	Bit 3	Bit 2	Bit 1	Bit 0 LSB
3	0x3	0011	BCT(7:0)							
4	0x4	0100	Z(7:0)							
5	0x5	0101	0	0	ETY	ETX	0			
9	0x9	1001	-	-	F5	F4	F3	-	-	-

Table 5: Programming Parameters

Parameters	Symbol	Number of Bits	Description	See Table
Bias current trimming	BCT	8	For side-shaft configuration: reduce the Hall device bias current of the X- and/or Y-axis	
Zero setting	Z	8	Sets the zero position with resolution of 360/256 deg per bit ~ 1.41 deg.	7
Enable trimming X	ETX	1	When enabled, the X-axis bias current is trimmed by the quantity BCT	6
Enable trimming Y	ETY	1	When enabled, the Y-axis bias current is trimmed by the quantity BCT	6
Flash register *n*	F*n*	1	Flash the content of register number *n*	

NOT RECOMMENDED FOR NEW DESIGNS REFER TO MA102

MPS Proprietary Information. Patent Protected. Unauthorized Photocopy and Duplication Prohibited.
© 2018 MPS. All Rights Reserved.

Sensor – Magnet Mounting

The sensitive volume of the MA100 is confined in a region less than 100µm wide and has multiple integrated Hall devices. This volume is located both horizontally and vertically within 50µm of the center of the QFN package. The sensor detects the angle of the magnetic field projected in a plane parallel to the package's upper surface. This means that the only relevant magnetic field is the in-plane component (X and Y components) in the middle point of the package.

Rotation Direction

Looking at the MagAlpha top, the angle increases when the magnetic field rotates clockwise. Figure 3 shows the zero angle of the unprogrammed MA100, where the cross indicates the sensitive point.

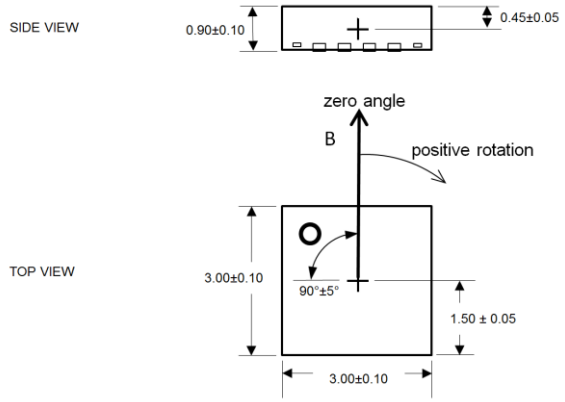

Figure 3: Zero Angle of Unprogrammed MA100

This type of detection provides flexibility for the design of an angular encoder. The sensor only requires the magnetic vector to lie essentially within the sensor plane with an amplitude of at least 30mT. Note that the MA100 can work with fields smaller than 30mT, but the linearity and resolution performance may deviate from the specifications. The straightforward solution is to place the MA100 sensor on the rotation axis of a permanent magnet (i.e.: a diametrically magnetized cylinder) (see Figure 4).

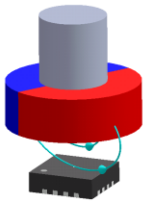

Figure 4: End-of-Shaft Mounting

If the end-of-shaft position is not available, the sensor can be positioned away from the rotation axis of a cylinder or ring magnet (see Figure 5). In this case, the magnetic field angle is no longer directly proportional to the mechanical angle. The MA100 can be adjusted to compensate for this effect and recover the linear relation between the mechanical angle and the sensor output. With multiple pole pair magnets, the MA100 can indicate multiple rotations for each mechanical turn.

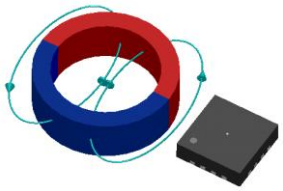

Figure 5: Side-Shaft Mounting

Mounting and Power Supply Decoupling

For most applications, a single 100nF bypass capacitor placed close to the supply pins decouples the MA100 from power supply noise. If better decoupling is required, a larger capacitor (i.e.: 1µF to 10µF) can be added in parallel with the 100nF capacitor, and/or a serial resistor (i.e.: 10Ω) can be added on the supply line. Ensure that the capacitor is connected with low impedance paths.

VFLASH needs to be supplied only when flashing the memory. Otherwise, VFLASH can remain unconnected (Figure 6).

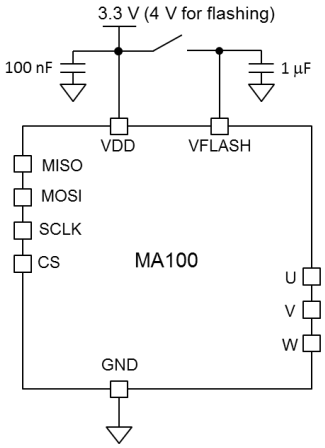

Figure 6: Connection for Supply Decoupling

The package's exposed pad can be soldered to the PCB to ensure optimal electrical, thermal, and mechanical conditions. In case the

NOT RECOMMENDED FOR NEW DESIGN REFER TO MA102

MPS Proprietary Information. Patent Protected. Unauthorized Photocopy and Duplication Prohibited.
© 2018 MPS. All Rights Reserved.

exposed pad is soldered, it is recommended to connect the pad to ground electrically.

Sensor Front-End

The magnetic field is detected with integrated Hall devices located in the center of the package. The angle is measured using the *spin*axis method, which directly digitizes the direction of the field without any arctangent computation or feedback loop-based circuit (interpolators, etc.).

The *spin*axis method is based on phase detection. It requires sensitive circuitry that generates a sinusoidal signal with a phase that represents the angle of the magnetic field. The angle is then retrieved by a time-to-digital converter, which counts the time between the zero crossing of the sinusoidal signal and the edge of a constant waveform (see Figure 7). The digitized time is the front-end output.

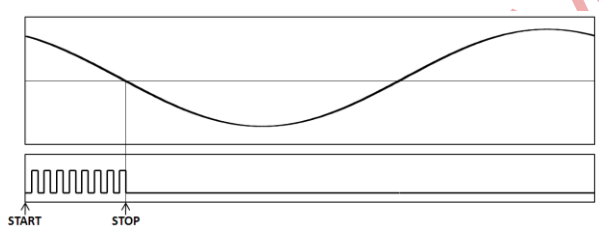

Top: Sine Waveform
Bottom: Clock of Time-to-Digital Converter
Figure 7: Phase Detection Method

At the output, the front-end delivers a digital number proportional to the angle of the magnetic field at the rate of 500kHz in a straightforward and open-loop manner.

Side Shaft

In case the MA100 is mounted in a side-shaft configuration, the relationship between the field angle and the mechanical angle is no longer directly linear. This is related to the fact that the tangential magnetic field is usually smaller than the radial field.

The field ratio (k) can be defined with Equation (1):

$$k = B_{rad} / B_{\tan} \quad (1)$$

Where B_{rad} and B_{tan} are the maximum radial, respectively tangential, magnetic field (see Figure 8).

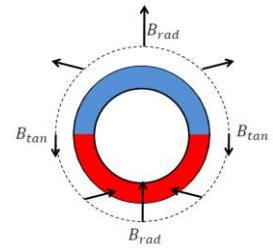

Figure 8: Side-Shaft Field

The ratio (k) depends on the magnet geometry and the distance to the sensor. The X-axis or the Y-axis bias currents can be reduced to recover an equal Hall signal for all angles, and therefore suppress non-linearity. The parameters ETX and ETY control which direction sensitivity is reduced. The current reduction is set by the parameter bias current trimming (BCT) (7:0), which is an integer from 0 to 255. To find the optimum BCT, change the value until the non-linearity reaches a minimum. Such calibration should be performed on individual parts.

Sensor Orientation: ETX and ETY

The dot printed on the package shows whether the radial field is aligned with the sensor coordinate X or Y (see Figure 9).

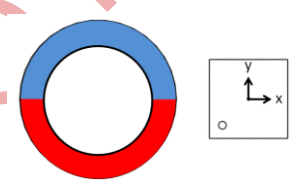

Figure 9: Package Top View with X- and Y-Axes

First, determine which axis needs to be reduced (see the qualitative field distribution around in Figure 8). For instance, with the arrangement depicted in Figure 9, the field along Y is tangential and therefore weaker. The X-axis should be reduced (ETX = 1, ETY = 0). Note that if both ETX and ETY are set to 1, the current bias is reduced in both directions the same way (i.e.: without side-shaft correction) (see Table 6).

Table 6: ETX and ETY

ETX	Enable Trimming the X-axis
0	Disabled
1	Enabled
ETY	**Enable Trimming the Y-axis**
0	Disabled
1	Enabled

NOT RECOMMENDED FOR NEW DESIGNS REFER TO MA102

MPS Proprietary Information. Patent Protected. Unauthorized Photocopy and Duplication Prohibited.
© 2018 MPS. All Rights Reserved.

Digital Signal Conditioning

Digital Filtering

Advanced digital filtering improves the resolution without adding latency. Measuring the rotation speed over the last 256 data points in addition to the angular position provides the best possible evaluation of the present position with the smallest possible lag.

Zero Setting

The zero position of the MagAlpha (a_0) can be programmed with 8 bits of resolution (1.40625 deg per bit). The angle streamed out (a_{out}) can be calculated with Equation (2):

$$a_{out} = a_{fe} - a_0 \quad (2)$$

Where a_{fe} is the raw angle out of the front end.

The parameter Z(7:0), which is 0 by default, determines a_0 (see Table 7). This setting is valid for all output formats (i.e.: SPI and UVW).

Table 7: Zero Position

Z(7:0)	Zero Position a_0 (deg)
0	0
1	1.41
…	…
255	358.59

Programming the MA100

The MA100 incorporates three programmable registers. Each register has 8 bits of memory. When the MA100 is powered up, each of these three 8 bits of memory are set to zero, unless the register was previously stored in the one-time programmable (OTP) memory. This means that during start-up, the content of the OTP memory is copied to the registers. Once flashed, the register content can no longer be modified.

To set the content of a register, a digital stream must be sent to the register consisting of the 4-bit register/write command (0010), a 4-bit register address, and the 8-bit value.

The data stream, sent through the MOSI wire is a total of 16 bits long:

command				reg. address				MSB				value				LSB
0	0	1	0													

Once the command is sent, it is effective immediately and affects the next data sent from the MagAlpha.

Reading Back the Register Content

To check the content of a register to verify that the programming was successful, first send the register/read command (0001) and the 4-bit address of the register being tested. The last 8 bits of the stream are irrelevant. For instance, the value 0000 0000 can be sent:

command				reg. address				MSB				value				LSB
0	0	0	1					x	x	x	x	x	x	x	x	

The MagAlpha response is within the same transmission. In the first byte (simultaneous to the 4-bit read command and the 4-bit address), the MagAlpha sends the 8 bits of the measured angle A(7:0). The second byte is the content of the register being tested. After this transmission, the MagAlpha continues delivering 8-bit angles A(7:0).

For example, to check the content of the register 4 (0100), which contains the zero setting, send the data:

command				reg. address				MSB				value				LSB
0	0	0	1	0	1	0	0	0	0	0	0	0	0	0	0	

Simultaneously, the MagAlpha replies:

Angle out		MSB	value	LSB
A(7:4)	A(3:0)		Z(7:0)	

Output Signals

The bit order of the transmitted data is MSB first and LSB last. Every 2µs, new data is transferred into the output buffer. The master device connected to the MagAlpha triggers the reading by pulling CS down. When a CS signal falling edge occurs, the data remains in the output buffer until the CS signal returns to logic 1. When CS is low, the master can read the data by sending clock pulses with a maximum frequency of 25MHz. There is no minimum frequency or timeout. See Figure 10 for a simple reading of the 8-bit data.

NOT RECOMMENDED FOR NEW DESIGNS REFER TO MA102

MPS Proprietary Information. Patent Protected. Unauthorized Photocopy and Duplication Prohibited.
© 2018 MPS. All Rights Reserved.

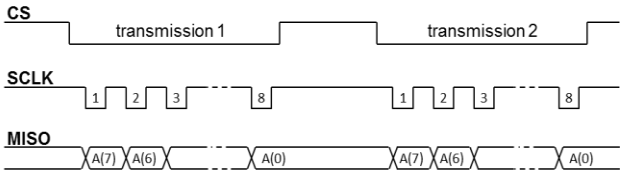

Figure 10: Timing Diagram for Simple SPI Readout

A full reading requires 8 clock pulses. The MA100 delivers:

MSB							*LSB*
A(7:0)							

If the master triggers the reading faster than the refresh rate, the MagAlpha may send the same sample several times.

Block Commutation - UVW

The UVW output emulates the three Hall switches usually used for the block commutation of the 3-phase electric motor. The three logic signals have a duty cycle of ½ and are shifted by 60 deg relative to each other (see Figure 11).

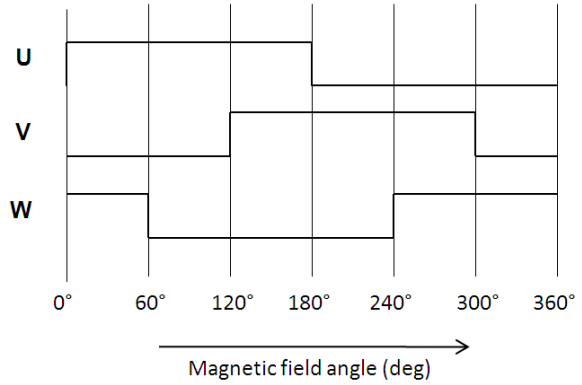

Figure 11: UVW Output during Rotation

One-Time Programmable (OTP) Programming

The one-time programmable (OTP) memory can permanently store the content of the programmable registers. The OTP memory is made of poly-silicon fuses. By activating the flash command, the content of an entire register can be stored in the OTP memory. The flash command consists of setting some bits (F*n*, where *n* is the register number) in register 9. For flashing the register, when the bit F*n* is set, the register *n* is stored permanently. It is important to note that only one register can be flashed at a time. It is possible to operate the MagAlpha without flashing the registers (see Figure 12).

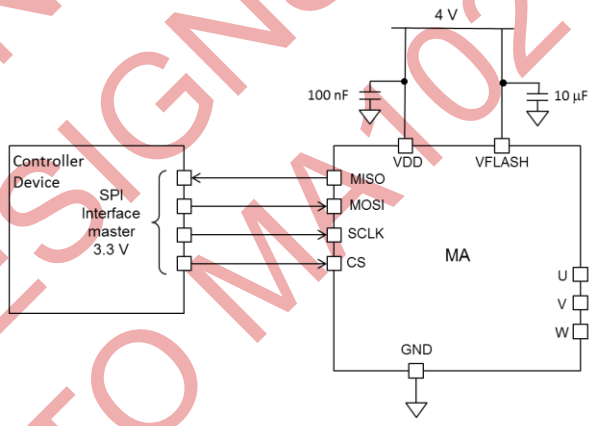

Figure 12: Circuit for Flashing

Burning the fuses during the flash process is irreversible. Once a register is flashed, the default values at power-up are always the same. After flashing, the content of the registers can no longer be modified.

NOT RECOMMENDED FOR DESIGNS REFER TO MA102

MPS Proprietary Information. Patent Protected. Unauthorized Photocopy and Duplication Prohibited.
© 2018 MPS. All Rights Reserved.

Flashing Procedure

Prior to flashing, it is recommended to test the MagAlpha with the new settings and verify the performance of the sensor. Then, proceed with the flashing using the below steps:

1. Send the parameter to the register.
2. Read back for verification.
3. Connect VFLASH to VDD.
4. Raise VDD to 4V.
5. Set the bit corresponding to the register to be flashed in register 9.
6. Untie VFLASH.
7. Return VDD to 3.3V.
8. Switch the MagAlpha off and on.
9. Check by reading back the register content.

Permanently Storing the Zero Position

The following example shows how to set and flash the zero position at 50 deg. Note that permanently storing the zero position requires burning the register 4.

1. Convert into binary within a resolution of 8 bits. 50/360 * 256 = 35.56. The closest 8 bit binary value is 00100100 (≈50.63 deg).
2. Store the 8 MSB (00100100) of the zero position in register 4:

command				reg. address				MSB				value			LSB
0	0	1	0	0	1	0	0	0	0	1	0	0	1	0	0

3. Read back register 4:

command				reg. address				MSB				value			LSB
0	0	0	1	0	1	0	0	0	0	0	0	0	0	0	0

If the programming was correct, the MagAlpha replies with the register 4 content:

Angle out		MSB				value			LSB
A(15:12)	A(11:8)	0	0	1	0	0	1	0	0

Completing Flashing

1. Connect VFLASH to VDD (4V).
2. Flash register 4:

command				reg. address				MSB				value			LSB
0	0	1	0	1	0	0	1	0	0	0	1	0	0	0	0

3. Disconnect VFLASH from VDD.
4. Turn the MagAlpha off and on (with VDD back to the normal 3.3V value).
5. Read back registers 4 to verify that the flashing was successfully accomplished.

For flashing multiple registers, send the flash command one by one. The flashing rate is specified in Sensor Output Specifications in the EC table.

Note: Flashing of the OTP registers requires raising both 3.3V VDD and VFlash to 4V. Isolate other devices sharing the 3.3V VDD rail if they are not tolerant to 4V.

NOT RECOMMENDED FOR NEW DESIGNS REFER TO MA102

MPS Proprietary Information. Patent Protected. Unauthorized Photocopy and Duplication Prohibited.
© 2018 MPS. All Rights Reserved.

PACKAGE INFORMATION

QFN-16 (3mmx3mm)

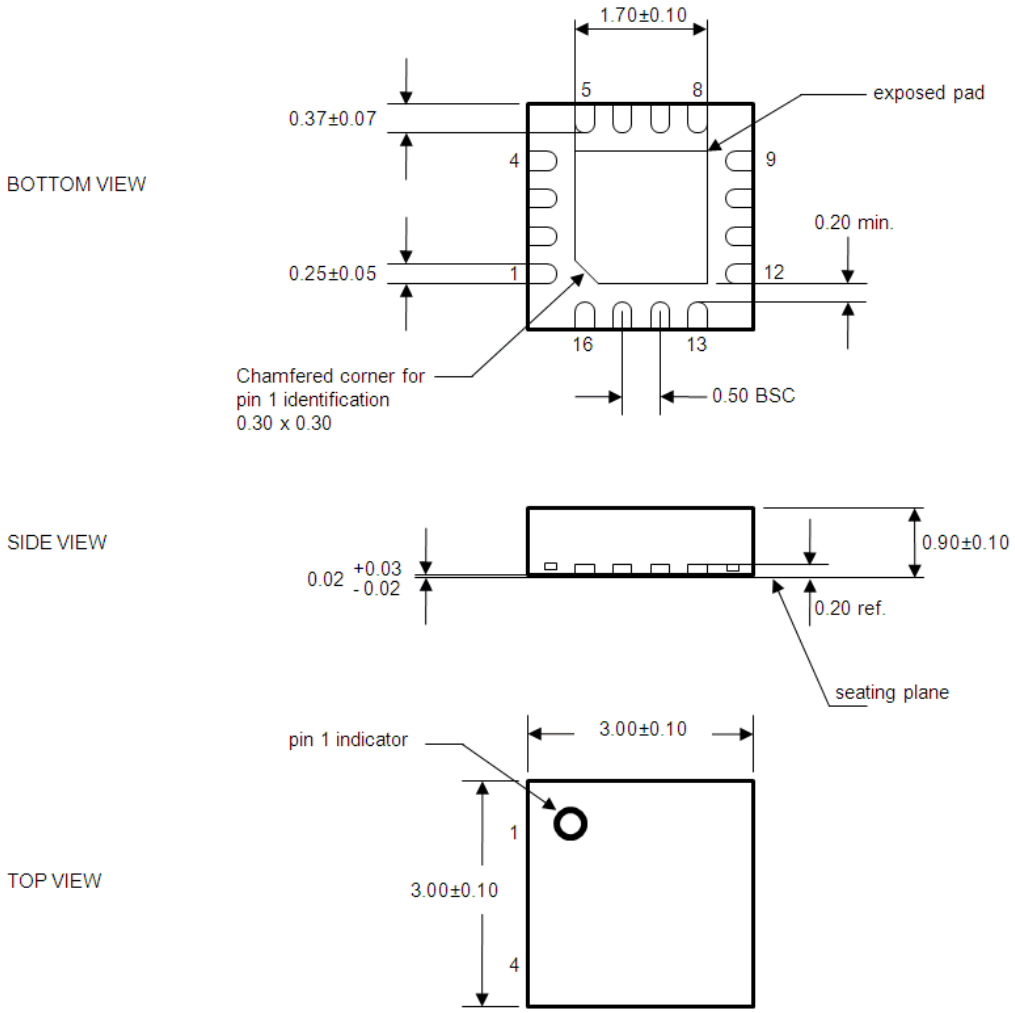

NOTES:

1. All dimensions are in mm.
2. Package dimensions do not include mold flash, protrusions, burrs, or metal smearing.
3. Coplanarity shall be 0.08.
4. Compliant with JEDEC MO-220.

NOT FOR NEW DESIGN
REFER TO MA102

NOTICE: The information in this document is subject to change without notice. Users should warrant and guarantee that third party Intellectual Property rights are not infringed upon when integrating MPS products into any application. MPS will not assume any legal responsibility for any said applications.

MPS Proprietary Information. Patent Protected. Unauthorized Photocopy and Duplication Prohibited.
© 2018 MPS. All Rights Reserved.

APPENDIX A: DEFINITIONS

Resolution (3σ noise level) The smallest angle increment distinguishable from the noise. Here, the resolution is defined as 3 times σ (the standard deviation in degrees) taken over 1000 data points at a constant position. The resolution in bits is obtained with: $\log_2(360/6\sigma)$.

Refresh Rate Rate at which new data points are stored in the output buffer.

Latency The time between the data-ready at the output and the instant at which the shaft passes that position. The lag in degrees is $lag = latency \cdot v$, where v is the angular velocity in deg/s.

Power-Up Time Time until the sensor delivers valid data starting at power up.

Integral Non-Linearity (INL) Maximum deviation between the noiseless sensor output and the shaft angle if the shaft zero angle coincides with the sensor zero angle.

Drift Angle variation rate when one parameter is changed (e.g.: temperature, VDD) and all the others, including the shaft angle, are maintained constant.

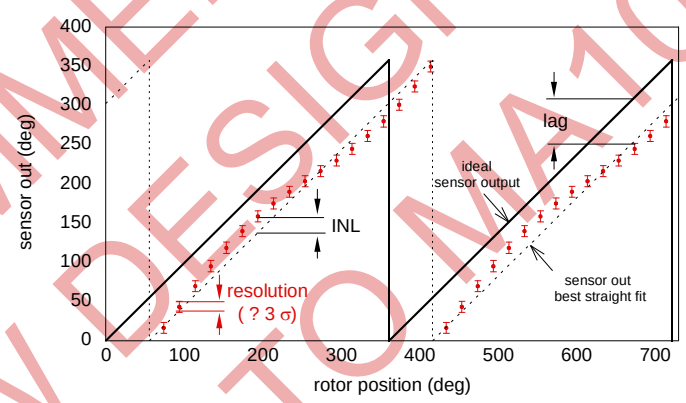

Figure A1: Absolute Angle Errors

Overall Reproducibility Maximum variation between two readings, successive or not, of the same shaft position at a fixed magnetic field over the complete temperature range.

NOT RECOMMENDED FOR NEW DESIGNS REFER TO MA102

MPS Proprietary Information. Patent Protected. Unauthorized Photocopy and Duplication Prohibited.
© 2018 MPS. All Rights Reserved.