Extract from the online catalog

VS-P1215-P1215-C1001/ 5,0

Order No.: 1608951

http://eshop.phoenixcontact.de/phoenix/treeViewClick.do?UID=1608951

Assembled PROFINET-fiber optic cable, round cable, HCS fiber 200/230 µm, SCRJ/IP67 push-pull plastic housing on SCRJ/IP67 push-pull plastic housing, for installation inside buildings, length: 5 m

http:// www.download.phoenixcontact.com Please note that the data given here has been taken from the online catalog. For comprehensive information and data, please refer to the user documentation. The General Terms and Conditions of Use apply to Internet downloads.

Commercial data	
EAN	4046356161466
Pack	1 Pcs.
Customs tariff	85369010
Weight/Piece	0.22222 KG
Catalog page information	Page 215 (PC-2007)

Technical data

Mechanical characteristics

Number of positions	2
Connection profile	SCRJ in acc. with IEC 61754-24
Locking type	Push Pull
Fiber type	HCS fiber
Fiber	200/230 µm
Ferrule diameter	2.50 mm
Number of fibers	2
Insertion/withdrawal cycles	≥ 500
External cable diameter	7.5 mm

Cable diameter	7.50 mm
Type of cable	Round cable
Length of cable	5 m
Color	Deep black RAL 9005
Ambient temperature (operation)	-30 °C ... 70 °C

Material data

Housing material	PA-GF
Material, O-ring	NBR
Cable seal material	TPE
Material, housing intermediate seal	NBR
Outer sheath, material	LSFH
External sheath, color	green-yellow RAL 6018
Ferrule material	Copper alloy
Ferrule holder color	Red
Degree of protection	IP65/IP67

Electrical characteristics

Number of positions	2

Drawings

Dimensioned drawing

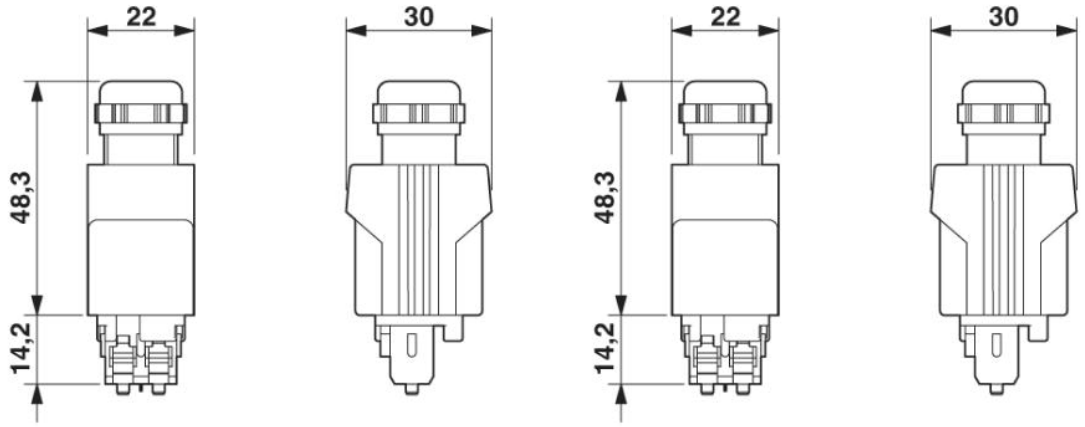

Address

PHOENIX CONTACT GmbH & Co. KG
Flachsmarktstr. 8
32825 Blomberg,Germany
Phone +49 5235 3 00
Fax +49 5235 3 41200
http://www.phoenixcontact.de

© 2008 Phoenix Contact
Technical modifications reserved;