Extract from the online catalog

VC-AR1S2-PE

Order No.: 1853489

http://eshop.phoenixcontact.de/phoenix/treeViewClick.do?UID=1853489

Panel mounting frame, with capacitive PE, for contact insert modules, type 1, number of insert modules 2

Commercial data	
GTIN (EAN)	4017918149369
Note	Made-to-order
sales group	D240
Pack	5 pcs.
Customs tariff	85369010
Weight/Piece	0.03155 KG

Product notes

WEEE/RoHS-compliant since: 01/01/2005

http://www.download.phoenixcontact.com Please note that the data given here has been taken from the online catalog. For comprehensive information and data, please refer to the user documentation. The General Terms and Conditions of Use apply to Internet downloads.

Accessories

Item	Designation	Description
Assembly		
1852862	VC-AF	Panel mounting flange for screw locking, for mounting contact insert modules, for a panel thickness of 1 - 5 mm

Diagrams/Drawings

Dimensioned drawing

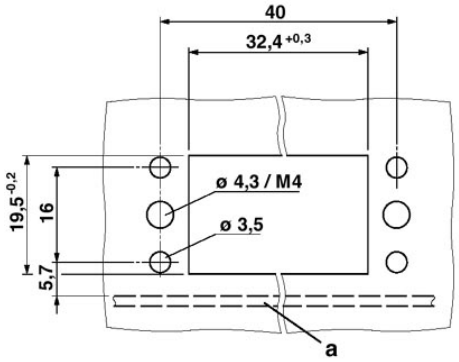

Address

PHOENIX CONTACT Inc., USA
586 Fulling Mill Road
Middletown, PA 17057,USA
Phone (800) 888-7388
Fax (717) 944-1625
http://www.phoenixcon.com

© 2010 Phoenix Contact
Technical modifications reserved;