Universal module - UM-2KS50/UNI/CS - 2319427

Please be informed that the data shown in this PDF Document is generated from our Online Catalog. Please find the complete data in the user's documentation. Our General Terms of Use for Downloads are valid
(http://phoenixcontact.com/download)

Universal module for connecting to up to 32 channel digital Yokogawa cards, 1:1 connection of the Yokogawa system connector on screw terminal block connection.

RoHS

Key Commercial Data

Packing unit	1 pc
GTIN	4 046356 361651
GTIN	4046356361651

Technical data

Dimensions

Width	140 mm
Height	126 mm
Depth	65 mm

Ambient conditions

Ambient temperature (operation)	-20 °C ... 65 °C
Ambient temperature (storage/transport)	-20 °C ... 70 °C

General

Max. perm. operating voltage	24 V DC ±10 %
Max. perm. current (per branch)	100 mA
Mounting position	any
Degree of protection	IP00

Connection data for connection 1

Connection name	Field level
Connection method	Screw connection
Conductor cross section solid	0.2 mm² ... 4 mm²
Conductor cross section flexible	0.2 mm² ... 2.5 mm²

Universal module - UM-2KS50/UNI/CS - 2319427

Technical data

Connection data for connection 1

Conductor cross section AWG	24 ... 12

Connection data for connection 2

Connection name	Controller level
Connection method	Yokogawa KS-compatible
Torque	0.5 Nm
Number of connections	2
Number of positions	50
Note	Usable system cables: Phoenix Contact YUC50, Yokogawa AKB331

Supported controller

Controller	YOKOGAWA CS3000 CentumVP
- suitable I/O card	ADV151
	ADV161
	ADV551
	ADV561
Controller	YOKOGAWA STARDOM
- suitable I/O card	NFDV151
	NFDV161
	NFDV551
	NFDV561

Standards and Regulations

Designation	Air clearances and creepage distances
Standards/regulations	DIN EN 50178: 1998-04
Rated insulation voltage	50 V
Rated surge voltage	0.5 kV (1.2/50 µs)
Insulation	Functional insulation
Degree of pollution	2
Overvoltage category	II

Environmental Product Compliance

REACh SVHC	Lead 7439-92-1
China RoHS	Environmentally Friendly Use Period = 50
	For details about hazardous substances go to tab “Downloads”, Category “Manufacturer's declaration”

Drawings

Universal module - UM-2KS50/UNI/CS - 2319427

Circuit diagram

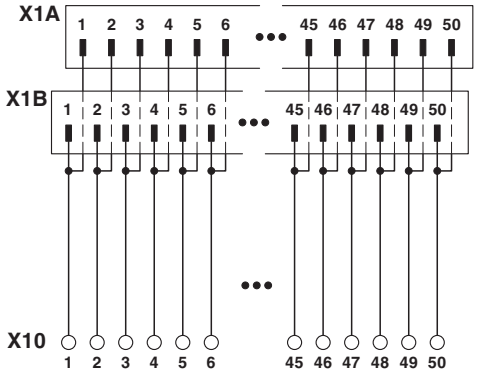

Dimensional drawing

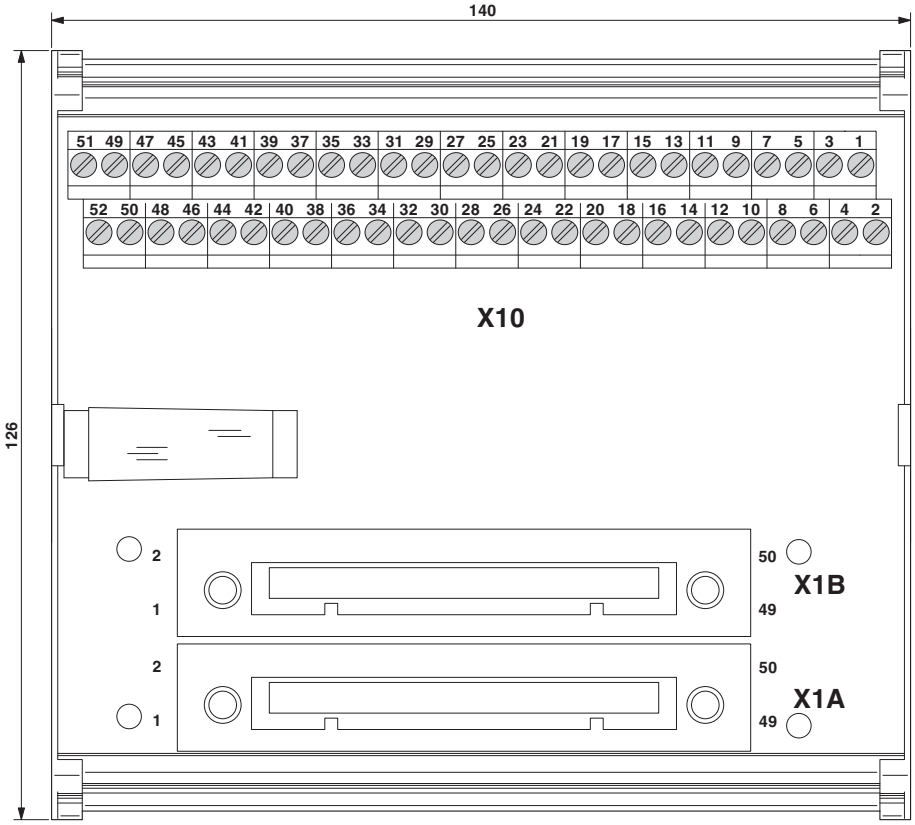

Approvals

Approvals

Approvals

EAC

Universal module - UM-2KS50/UNI/CS - 2319427

Approvals

Ex Approvals

Approval details

EAC	EAC	RU C-DE.A*30.B.01742

Phoenix Contact 2019 © - all rights reserved
http://www.phoenixcontact.com

PHOENIX CONTACT GmbH & Co. KG
Flachsmarktstr. 8
32825 Blomberg
Germany
Tel. +49 5235 300
Fax +49 5235 3 41200
http://www.phoenixcontact.com