VB326SP

HIGH VOLTAGE IGNITION COIL DRIVER POWER I.C.

TYPE	V_{cl}	I_{cl}	I_{CC}
VB326SP	360V	10A	150mA

- PRIMARY COIL VOLTAGE INTERNALLY SET
- COIL CURRENT LIMIT INTERNALLY SET
- LOGIC LEVEL COMPATIBLE INPUT
- DRIVING CURRENT QUASI PROPORTIONAL TO COLLECTOR CURRENT
- SINGLE FLAG-ON COIL CURRENT
- LOW VOLTAGE CLAMP THERMAL SHUTDOWN

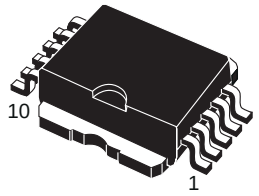

PowerSO-10™

DESCRIPTION

The VB326SP is a high voltage power integrated circuit made using the STMicroelectronics VIPower™ M1-3 technology, with vertical current flow power darlington and logic level compatible driving circuit. The enable pin allows to externally block the switch when the input is on. Built-in protection circuit for coil current limiting and collector voltage clamping allows the device to be used as smart, high voltage, high current interface in advanced electronic ignition system. If the input signal from the micro happens to remain high, the device protects itself against over-heating by forcing collector current to smooth decrease (low voltage clamp feature) and no undesidered spark occurs (see figure 4).

BLOCK DIAGRAM

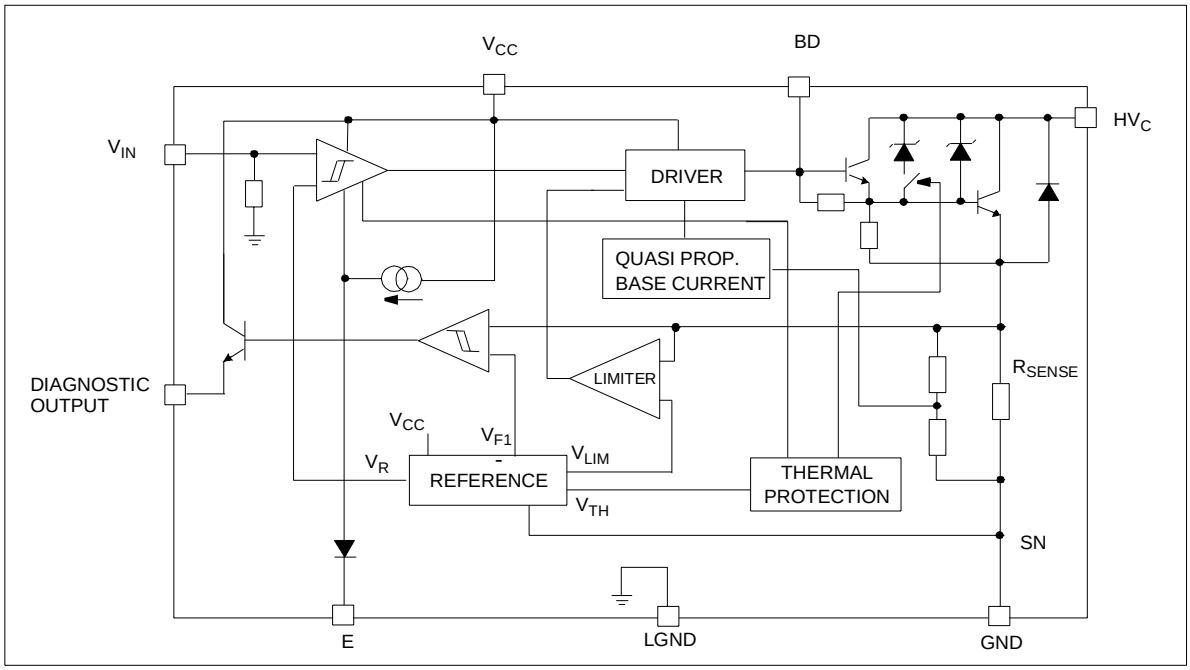

ABSOLUTE MAXIMUM RATING

Symbol	Parameter	Value	Unit
HV_c	Collector voltage (Internally limited)	-0.3 to V_{clamp}	V
I_C	Collector current (Internally limited)	10	A
$I_{C(gnd)}$	DC current on Emitter Power	± 10.5	A
V_{CC}	Driving stage supply voltage	-0.3 to 7	V
I_s	Driving circuitry supply current	± 200	mA
$I_{s(gnd)}$	DC current on Ground pin	± 1	A
V_{IN}	Input voltage	-0.3 to V_{CC} + 0.3	V
I_{IN}	Maximum Input Current	100	mA
f_{IN}	Logic Input Frequency in Operative Mode	DC to 150	Hz
$V_{OUT(flag)}$	Output Voltage Primary Threshold Current Level	-0.3 to V_{CC} + 0.3	V
$I_{OUT(flag)}$	Flag Output Current	100	mA
P_{max}	Power Dissipation (T_c=25°C)	125	W
$E_{s/b}$	Self Clamped Energy during Output Power Clamping (See figure 2)	275	mJ
V_{ESD}	ESD voltage (HV_c pin)	± 4	KV
V_{ESD}	ESD voltage (Enable pin)	+ 1.5 ; -2	KV
V_{ESD}	ESD voltage (Other pins)	± 2	KV
I_{BD}	Input Darlington Base Current	150	mA
V_{BD}	Input Darlington Base Voltage	Internally limited	V
T_j	Operating Junction Temperature	-40 to 150	°C
T_{stg}	Storage temperature Range	-55 to 150	°C
V_E	Maximum Enable Voltage	-0.3 to 5.5	V
I_E	Maximum Enable Current	± 150	µA

THERMAL DATA

Symbol	Parameter		Value	Unit
$R_{thj-case}$	Thermal resistance junction-case	(MAX)	1	°C/W
$R_{thj-amb}$	Thermal resistance junction-ambient	(MAX)	51	°C/W

PIN FUNCTION

No	Name	Function
1 - 5	LGND	Signal Ground
2 - 3 - 4	GND	Emitter Power Ground
6	E	Enable (*)
7	V_{CC}	Logic Supply Voltage
8	BD	Base Darlington
9	INPUT	Logic input channel (Internal Pull Down)
10	FLAG	Diagnostic Output Signal (Open Emitter)
TAB	HV_C	Primary Coil Output Driver (Open Collector)

(*) When grounded the Input is Enabled

CONNECTION DIAGRAM (TOP VIEW)

Pin 1 and Pin 5 must be externally connected to Pins 2÷4.

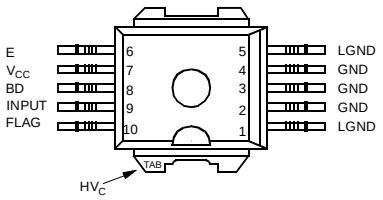

ELECTRICAL CHARACTERISTICS (5.3V < V_{bat} < 24V; V_{CC}=5V ± 10%; -40ºC < T_j < 125ºC; R_{coil}=580mΩ; L_{coil}=3.75mH unless otherwise specified; See note 1)

Symbol	Parameter	Test Conditions	Min	Typ	Max	Unit
V_{cl}	High Voltage Clamp	I_{coil}=6.5A	320	360	420	V
V_{lcl}	Low Voltage Clamp	I_{coil}=6.5A; T_j=T_{sd}	30	40	50	V
$V_{ce(sat)}$	Power Stage Saturation Voltage	I_C=6A; V_{IN}=4V		1.5	2	V
$I_{CC(stdby)}$	Stand-by Supply Current	IN=Off			11	mA
I_{CC}	DC Logic Current	V_b=16V; I_C=6.5A; f=100Hz; Load = Coil; V_{CC}=5.5V			40	mA
$I_{CC(peak)}$	Peak DC Logic Current during On Phase	I_C=6.5A		100	150	mA
V_{CC}	DC Logic Voltage		4.5		5.5	V
I_{cl}	Coil Current Limit	-40ºC < T_j < 125ºC (See note 2)	9		11	A
$I_{c(off)}$	Output Off State Current	IN=Off; V_{HVC}=24V; V_{CC}=5V; T_j=25ºC			5	mA
T_{Ic_ctr}	Thermal Temperature Output Current Control	OUT=On	150		(*)	ºC
V_{INH}	High Level Input Voltage	V_{CC}=4.5V	4		V_{CC}	V
V_{INL}	Low Level Input Voltage	V_{CC}=5.5V	-0.3		0.8	V
$V_{IN(hyst)}$	Input Threshold Hysteresis		0.4			V
I_{INH}	High Level Input Current	V_{IN}=4V			100	µA
I_{INL}	Low Level Input Current	V_{IN}=0.8V	0		30	µA
I_{INpd}	Input Active Pull Down	V_{IN}=4V	10		100	µA
V_{diagH}	High Level Flag Output Voltage	R_{EXT}=22KΩ; C_{EXT}=1nF (See note 3)	V_{CC} - 1		V_{CC}	V
V_{diagL}	Low Level Flag Output Voltage	R_{EXT}=22KΩ; C_{EXT}=1nF (See note 3)			0.5	V
I_{diagTH}	Coil Current Level Threshold	T_j=25ºC	6.15	6.5	6.85	A
I_{diagTD}	Coil Current Level Threshold Drift	(See figure 1)				
I_{diag}	High Level Flag Output Current	I_C > I_{diagTH}; V_{diag}=3V	0.5			mA
$I_{diag(leak)}$	Leakage Current on Flag Output	V_{IN}=Low; V_{CC}=5.5V			10	µA
V_F	Antiparallel Diode Forward Voltage	I_C= -1A			2	V
$E_{s/b}$	Single Pulse Avalanche Energy	L=6mH; I_C= 8A (See figure 2)		180		mJ
t_{ON}	Turn-on time	R_c=0.5Ω; L_c=3.75mH; T_j=25ºC; V_{bat}=13V (See figure 6)		1	5	µs
t_{OFF}	Turn-off time	R_c=0.5Ω; L_c=3.75mH; I_C=6.5A; T_j=25ºC; V_{bat}=13V (See figure 6)		15	25	µs
T_{sd}	Thermal shut-down intervention		150			ºC
V_{EH}	High Level Enable Voltage	V_{IN}=V_{INH}; OUT=Off (See Note 4)	2			V
V_{EL}	Low Level Enable Voltage	V_{OUT} free to follow V_{IN}			0.40	V

Note 1: parametric degratation are allowed with 5.3<V_b<10V and V_b>24V.
Note 2: the primary coil current value I_{cl} must be measured 1ms after desaturation of the power stage.
Note 3: no internal Pull-down.
Note 4: if ENABLE pin is floating OUT=Off for every input status.
(*) Internally Limited

ELECTRICAL CHARACTERISTICS (continued)

Symbol	Parameter	Test Conditions	Min	Typ	Max	Unit
I_{EH}	High Level Sinked Enable Current	V_E=5V			500	µA
I_{EL}	Low Level Sinked Enable Current	V_E<0.4V	- 200			µA
$V_{BD(off)}$	Base Darlington Voltage Off	V_E=V_{EH}			1	V
$V_{BD(on)}$	Base Darlington Voltage On	V_{IN}=V_{INH}; V_E=V_{EL}; I_C=6.5A	1.8			V

PRINCIPLE OF OPERATION

The VB326SP is mainly intended as a high voltage power switch device driven by a logic level input and interfaces directly to a high energy electronic ignition coil.

The input V_{IN} of the VB326SP is fed from a low power signal generated by an external controller that determinesboth dwell time and ignition point. During Vin high (≥ 4V) the VB326SP increases current in the coil to the desired, internally set current level.

After reaching this level, the coil current remains constant until the ignition point, that corresponds to the transition of Vin from high to low (typ. 1.9V threshold).

During the coil current switch-off, the primary voltage HV_C is clamped at an internally set value V_{cl}, typically 380V. The transition from saturation to desaturation, coil current limiting phase, must have the ability to accomodate an overvoltage.

A maximum overshoot of 20V is allowed.

FEEDBACK

When the collector current exceeds 6.5A, the feedback signal is turned high and it remains so, until the input voltage is turned-off.

OVERVOLTAGE

The VB326SP can withstand the following transients of the battery line:

-100V/2msec(R_i =10 Ω)

+100V/0.2msec (R_i =10 Ω)

+50V/400msec (R_i = 4.2 Ω, with V_{IN}= 3V)

Figure 1: Flag current Vs. temperature

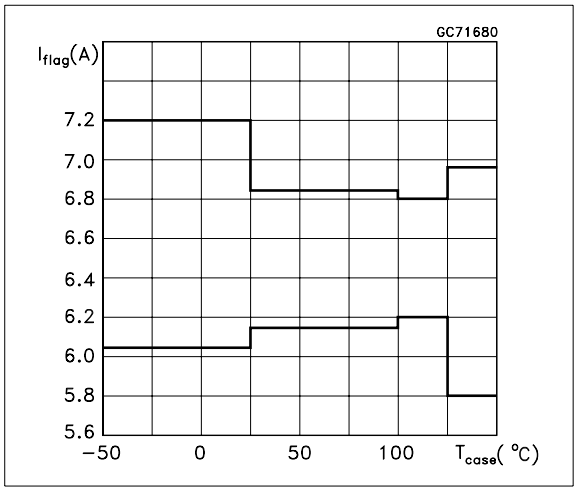

Figure 2: Single pulse avalanche energy capability

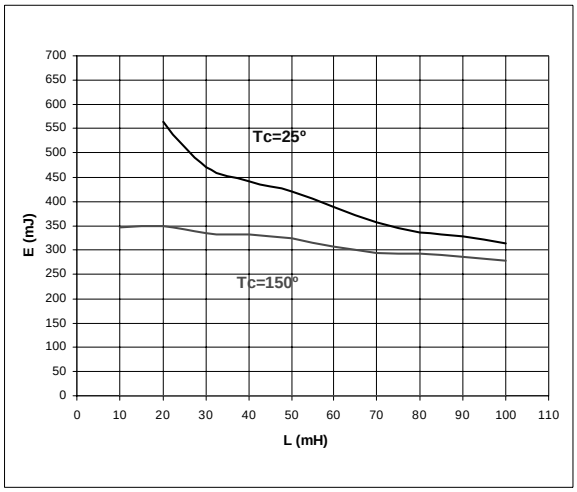

Figure 3: Self Clamped Inductive Switching Current Vs. Time

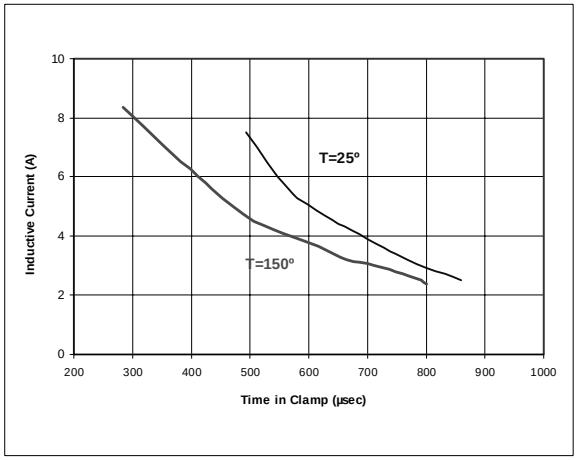

Figure 4: Low voltage clamp feature

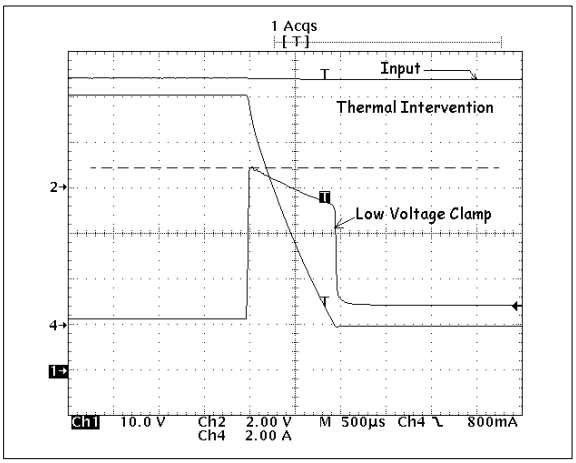

Figure 5: Typical application diagram

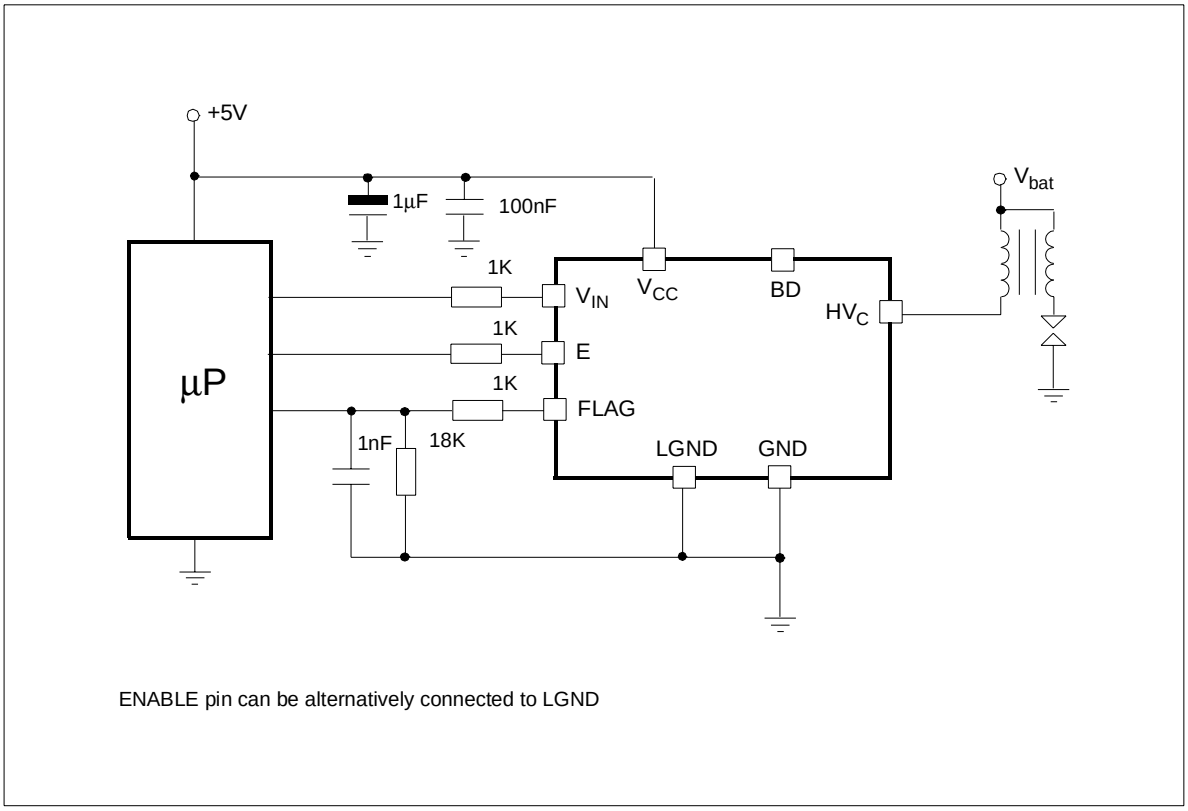

Figure 6: Switching time for inductive load

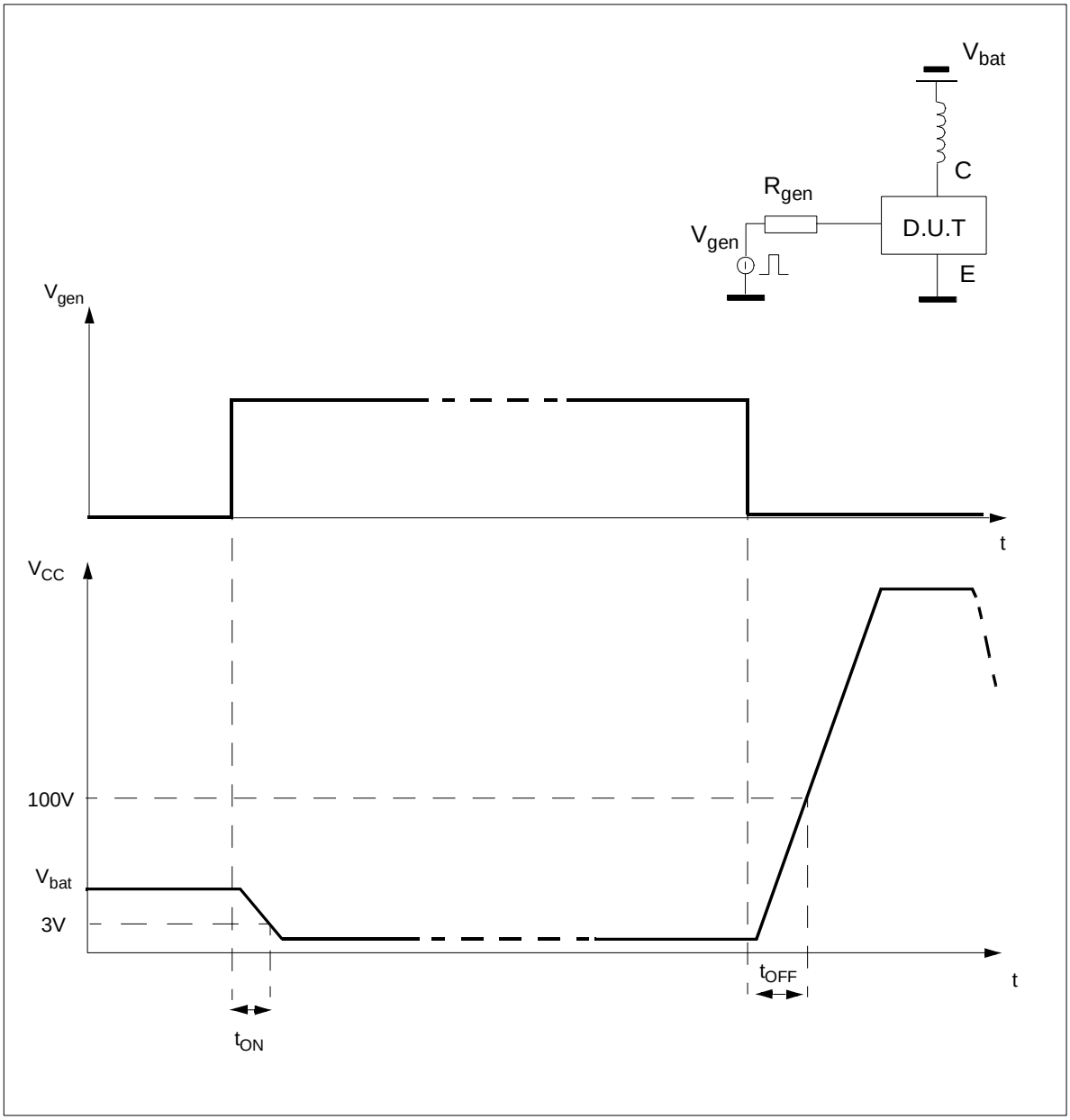

PowerSO-10™ MECHANICAL DATA

DIM.	mm.			inch		
	MIN.	TYP	MAX.	MIN.	TYP.	MAX.
A	3.35		3.65	0.132		0.144
A (*)	3.4		3.6	0.134		0.142
A1	0.00		0.10	0.000		0.004
B	0.40		0.60	0.016		0.024
B (*)	0.37		0.53	0.014		0.021
C	0.35		0.55	0.013		0.022
C (*)	0.23		0.32	0.009		0.0126
D	9.40		9.60	0.370		0.378
D1	7.40		7.60	0.291		0.300
E	9.30		9.50	0.366		0.374
E2	7.20		7.60	0.283		300
E2 (*)	7.30		7.50	0.287		0.295
E4	5.90		6.10	0.232		0.240
E4 (*)	5.90		6.30	0.232		0.248
e		1.27			0.050	
F	1.25		1.35	0.049		0.053
F (*)	1.20		1.40	0.047		0.055
H	13.80		14.40	0.543		0.567
H (*)	13.85		14.35	0.545		0.565
h		0.50			0.002	
L	1.20		1.80	0.047		0.070
L (*)	0.80		1.10	0.031		0.043
α	0º		8º	0º		8º
α (*)	2º		8º	2º		8º

(*) Muar only POA P013P

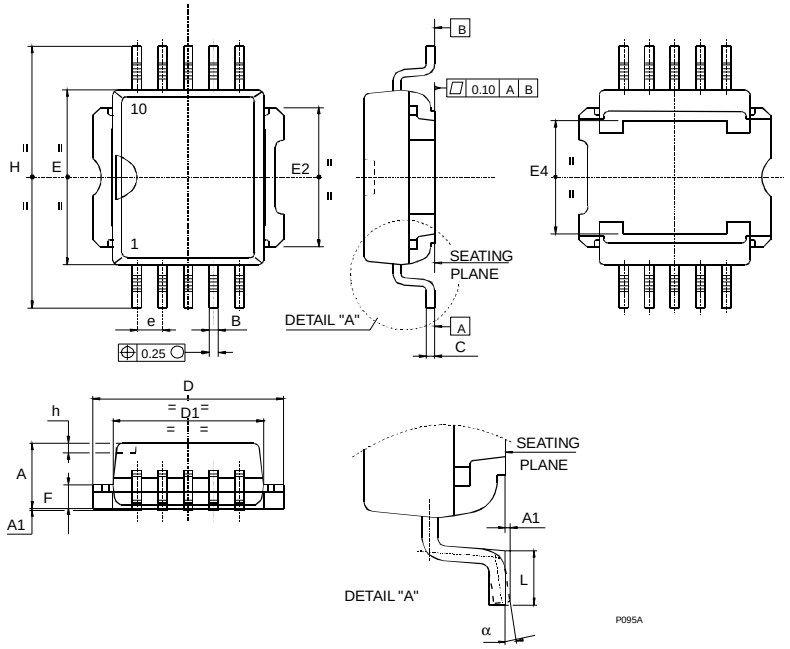

PowerSO-10™ SUGGESTED PAD LAYOUT

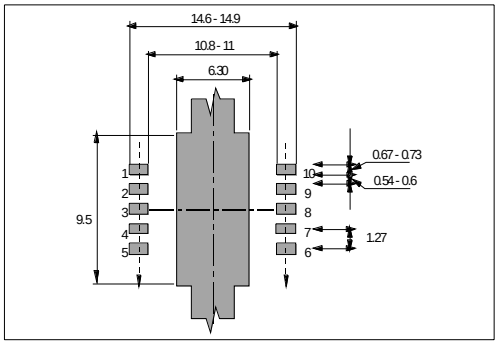

TUBE SHIPMENT (no suffix)

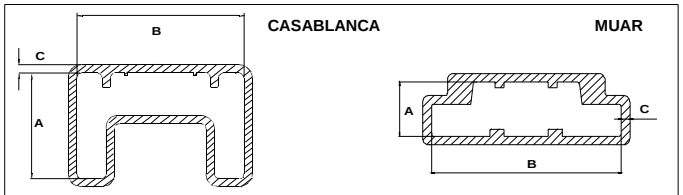

All dimensions are in mm.

	Base Q.ty	Bulk Q.ty	Tube length (± 0.5)	A	B	C (± 0.1)
Casablanca	50	1000	532	10.4	16.4	0.8
Muar	50	1000	532	4.9	17.2	0.8

TAPE AND REEL SHIPMENT (suffix "13TR")

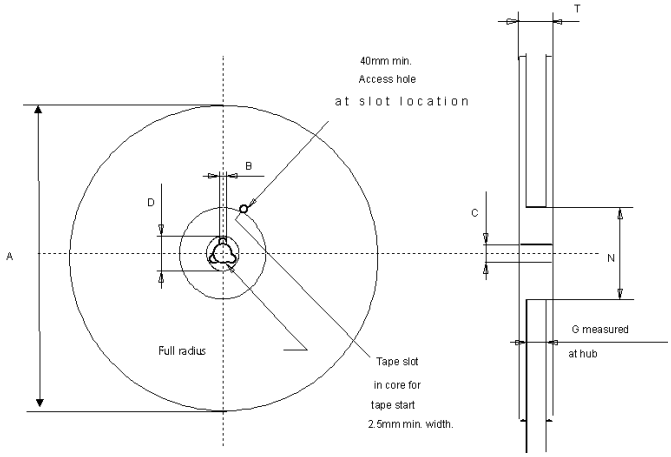

REEL DIMENSIONS

Base Q.ty	600
Bulk Q.ty	600
A (max)	330
B (min)	1.5
C (± 0.2)	13
F	20.2
G (+ 2 / -0)	24.4
N (min)	60
T (max)	30.4

All dimensions are in mm.

TAPE DIMENSIONS

According to Electronic Industries Association (EIA) Standard 481 rev. A, Feb 1986

Tape width	**W**	24
Tape Hole Spacing	**P0 (± 0.1)**	4
Component Spacing	**P**	24
Hole Diameter	**D (± 0.1/-0)**	1.5
Hole Diameter	**D1 (min)**	1.5
Hole Position	**F (± 0.05)**	11.5
Compartment Depth	**K (max)**	6.5
Hole Spacing	**P1 (± 0.1)**	2

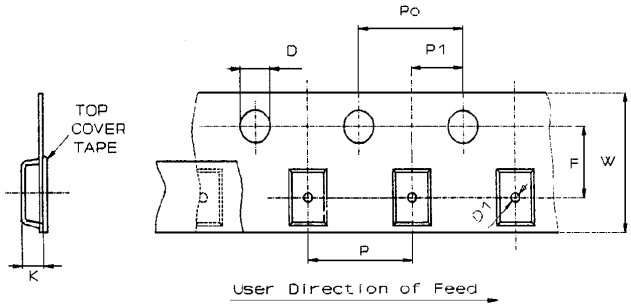

All dimensions are in mm.

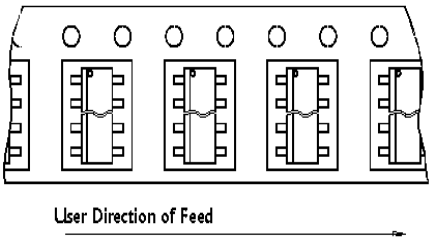

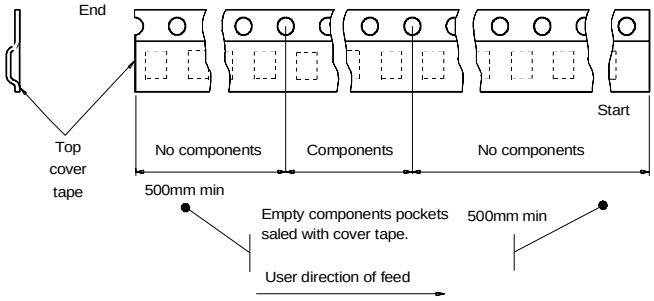

Information furnished is believed to be accurate and reliable. However, STMicroelectronics assumes no responsibility for the consequences of use of such information nor for any infringement of patents or other rights of third parties which may results from its use. No license is granted by implication or otherwise under any patent or patent rights of STMicroelectronics. Specifications mentioned in this publication are subject to change without notice. This publication supersedes and replaces all information previously supplied. STMicroelectronics products are not authorized for use as critical components in life support devices or systems without express written approval of STMicroelectronics.
The ST logo is a trademark of STMicroelectronics

© 2003 STMicroelectronics - Printed in ITALY- All Rights Reserved.

STMicroelectronics GROUP OF COMPANIES
Australia - Brazil - Canada - China - Finland - France - Germany - Hong Kong - India - Israel - Italy - Japan - Malaysia - Malta - Morocco - Singapore - Spain - Sweden - Switzerland - United Kingdom - U.S.A.

http://www.st.com