DRAWING MADE IN THIRD ANGLE PROJECTION
THIS DRAWING IS UNPUBLISHED. RELEASED FOR PUBLICATION ,19 .
© COPYRIGHT 19 BY AMP INCORPORATED. ALL INTERNATIONAL RIGHTS RESERVED.

LOC	DIST
AD	51

			REVISIONS		
P	F	ZONE	LTR	DESCRIPTION	DATE	APPD
			E	REVSREDRAWN PER ECN BD36068CF1329	4-23-90	–
			F	OBS 1-102161-3 ECN BD5792	04/02/92	DK
			G	PER EC 0020-0330-96 T.S.	9-25-96	HR

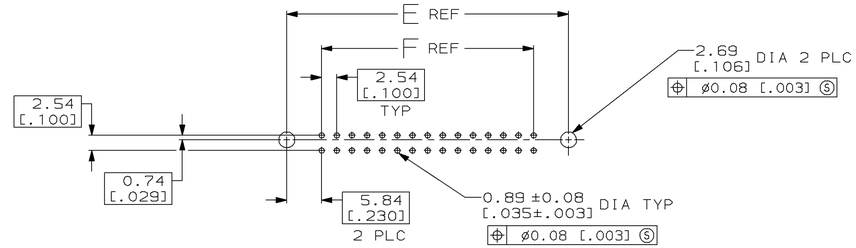

RECOMMENDED
PC BOARD MOUNTING DIMENSIONS
SCALE 2:1

1. COORDINATE DIMENSION APPLIES FROM BASIC LOCATION.
2. 10 AND 14 POSITION SIZES CONTAIN ONLY ONE SLOT FOR SNAP-IN POLARIZER (MILITARY POLARIZATION) LOCATED AS SHOWN.
3. 10 POSITION SIZES CONTAIN ONLY ONE SLOT FOR DUAL POLARIZATION, LOCATED AS SHOWN.
4. RECOMMENDED PRINTED CIRCUIT BOARD THICKNESS IS 3.18 [.125].

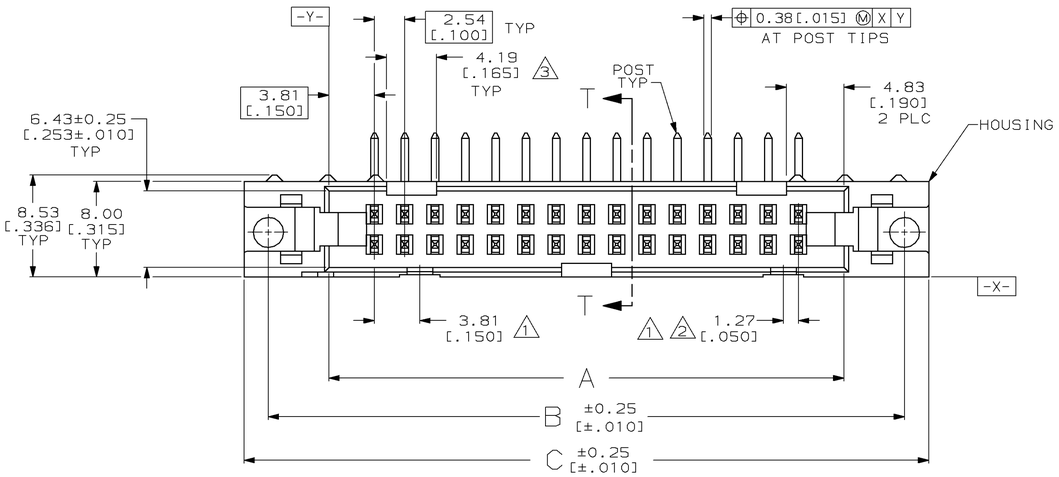

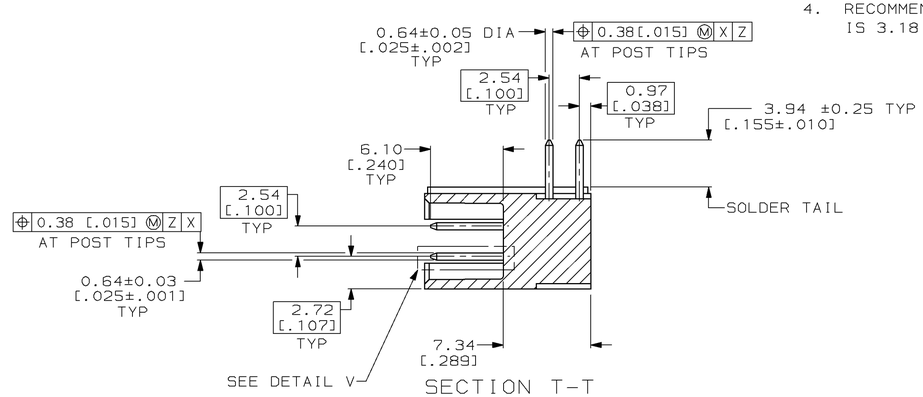

SECTION T-T

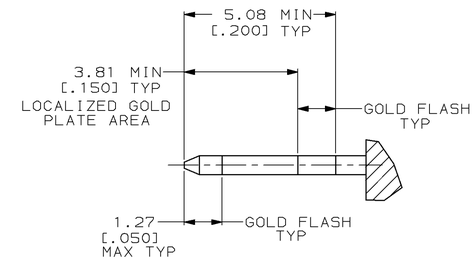

DETAIL V
SCALE 10:1

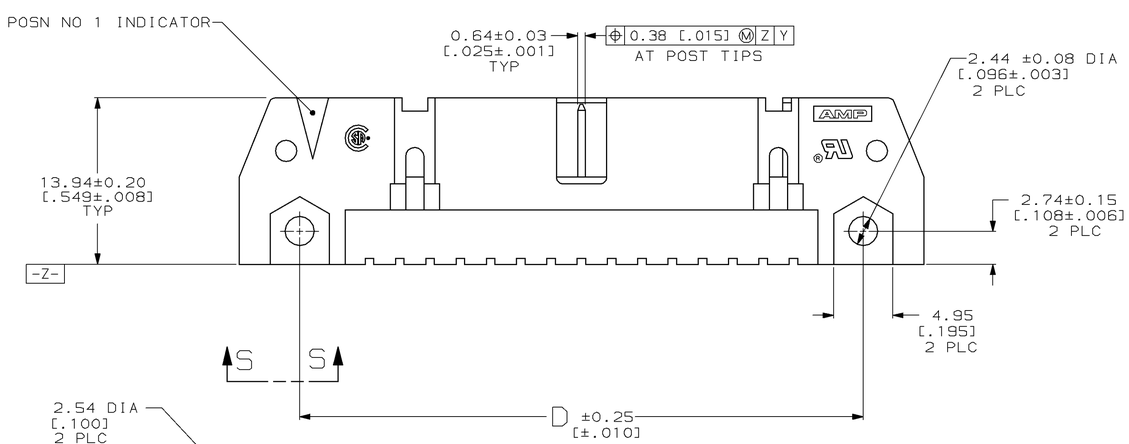

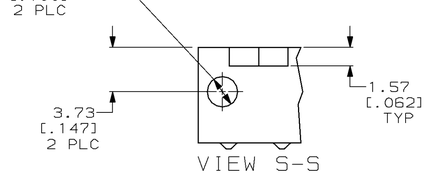

VIEW S-S

OBSOLETE	53.34 [2.100]	65.02 [2.560]	65.02 [2.560]	75.18 [2.960]	71.12 [2.800]	60.96 [2.400]	44	1-102161-3
	78.74 [3.100]	90.42 [3.560]	90.42 [3.560]	100.58 [3.960]	96.52 [3.800]	86.36 [3.400]	64	1-102161-2
	73.66 [2.900]	85.34 [3.360]	85.34 [3.360]	95.50 [3.760]	91.44 [3.600]	81.28 [3.200]	60	1-102161-1
	60.96 [2.400]	72.64 [2.860]	72.64 [2.860]	82.80 [3.260]	78.74 [3.100]	68.58 [2.700]	50	1-102161-0
	48.26 [1.900]	59.94 [2.360]	59.94 [2.360]	70.10 [2.760]	66.04 [2.600]	55.88 [2.200]	40	102161-9
	40.64 [1.600]	52.32 [2.060]	52.32 [2.060]	62.48 [2.460]	58.42 [2.300]	48.26 [1.900]	34	102161-8
	35.56 [1.400]	47.24 [1.860]	47.24 [1.860]	57.40 [2.260]	53.34 [2.100]	43.18 [1.700]	30	102161-7
	30.48 [1.200]	42.16 [1.660]	42.16 [1.660]	52.32 [2.060]	48.26 [1.900]	38.10 [1.500]	26	102161-6
	27.94 [1.100]	39.62 [1.560]	39.62 [1.560]	49.78 [1.960]	45.72 [1.800]	35.56 [1.400]	24	102161-5
	22.86 [.900]	34.54 [1.360]	34.54 [1.360]	44.70 [1.760]	40.64 [1.600]	30.48 [1.200]	20	102161-4
	17.78 [.700]	29.46 [1.160]	29.46 [1.160]	39.62 [1.560]	35.56 [1.400]	25.40 [1.000]	16	102161-3
	15.24 [.600]	26.92 [1.060]	26.92 [1.060]	37.08 [1.460]	33.02 [1.300]	22.86 [.900]	14	102161-2
	10.16 [.400]	21.84 [.860]	21.84 [.860]	32.00 [1.260]	27.94 [1.100]	17.78 [.700]	10	102161-1
	F	E	D	C	B	A	NO OF POSN	PART NUMBER

PART NO

DO NOT SCALE PRINT.
UNLESS SPECIFIED
DIMENSIONS IN mm [INCHES]
TOLERANCES ON ;
2 PLC DEC ± 0.13[.005]
3 PLC DEC ± –
ANGLES ± –

MATERIAL HOUSING:
GLASS FILLED NYLON OR POLYESTER, 94V-0 RATED, BLACK
POSTS: PH BRZ

FINISH POSTS:
0.38µm [.000015] MIN GOLD ON LOCALIZED GOLD PLATE AREA, 2.54µm [.000100] MIN BRIGHT TIN-LEAD ON SOLDER TAIL, ALL OVER 1.27µm [.000050] MIN NICKEL ON ENTIRE POST

DR 4-23-90 H.MOLL
CHK 11-28-90 R.STONE
APPD 11-29-90 S.GOOD
APPD 11-29-90 D.HOFFMAN
PRODUCT SPEC 108-40018
APPLICATION SPEC –
WEIGHT –

AMP INCORPORATED
Harrisburg, Pa. 17105

NAME
HEADER ASSY, UNIVERSAL, AMP-LATCH™

SIZE D | CAGE CODE 00779 | DRAWING NO 102161
SCALE 4:1 | SHEET 1 OF 1

CUSTOMER DRAWING