207W245 -25 -0 Product Details

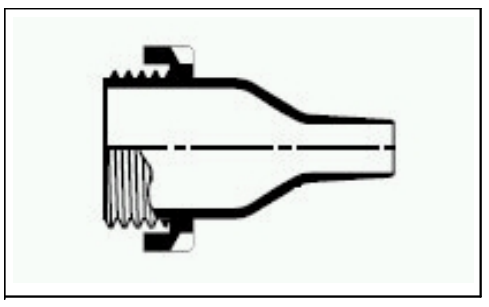

207W245 -25 -0

Raychem Part Number:
844341 - 000

Active

Molded Parts

Always EU RoHS/ELV Compliant (Statement of Compliance)

Product Highlights:

- Feed through
- Family Name = 207W2
- General Purpose Application
- 25 Material Code
- Adhesive Code = S1017, S1048, S1125

View all Features | Find Similar Products

Quick Links

Check Pricing & Availability
Search for Tooling
Product Feature Selector
Contact Us About This Product

Documentation & Additional Information

Product Drawings:

- Customer Drawing (PDF, English)

Catalog Pages/Data Sheets:

- None Available

Product Specifications:

- None Available

Application Specifications:

- None Available

Instruction Sheets:

- None Available

CAD Files:

- None Available

List all Documents

Additional Information:

- Product Line Information

Related Products:

- Tooling

Product Features

(Please use the Product Drawing for all design activity)

Product Type Features:

- Product Type = Feed through
- Mounting Hole Diameter (mm [in]) = 60.5 [2.38]
- Size = 45
- Material = Fluid Resistant Modified Elastomer

Mechanical Attachment:

- Nut Type = A

Electrical Characteristics:

- Expanded ID, Min. (mm [in]) = 41.90 [1.651]
- Recovered ID, Max. (mm [in]) = 18.00 [0.710]

Body Related Features:

- Threaded End Inside Diameter (mm [in]) = 45 [1.77]
- Wall Thickness - Full Recovery (Nominal) (mm [in]) = 3.05 [0.120]
- Length (M [ft]) = 0.102 [0.333]
- O-Ring = Without

Contact Related Features:

- Family Name = 207W2

Housing Related Features:

- Adhesive Pre -Coating = Without
- Adhesive Description = Adhesive Purchased Separately.

Configuration Related Features:

- Material Code = 25
- Adhesive Code = S1017, S1048, S1125

Industry Standards:

- RoHS/ELV Compliance = RoHS compliant, ELV compliant
- Lead Free Solder Processes = Not relevant for lead free process
- RoHS/ELV Compliance History = Always was RoHS compliant

Operation/Application:

- Application = General Purpose

Other:

- Brand = Raychem

© 2008 Tyco Electronics Corporation All Rights Reserved