SmartRF Transceiver Evaluation Board

User's Guide

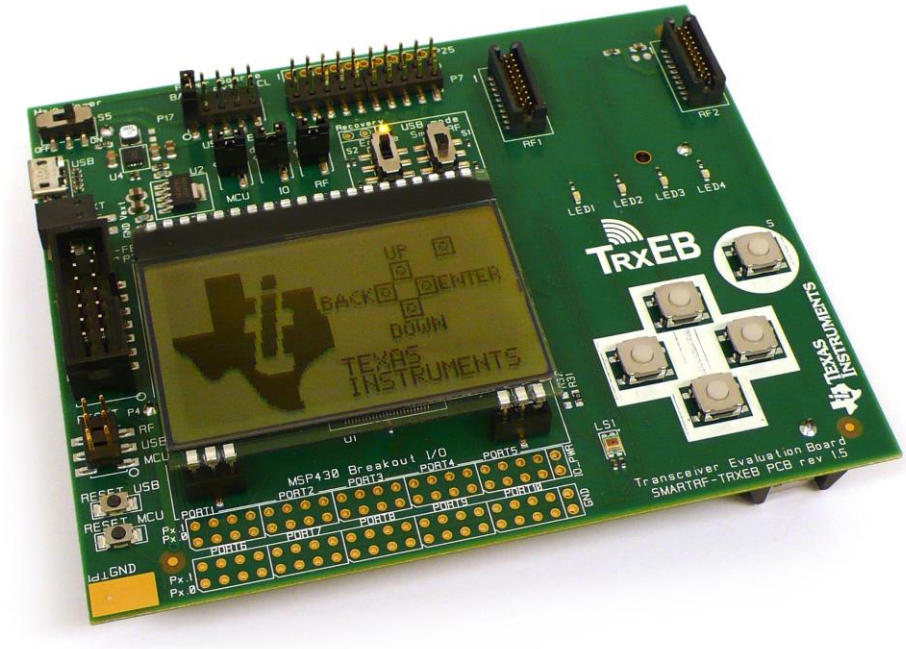

SWRU294

Table of Contents

TABLE OF CONTENTS **3**
LIST OF FIGURES **5**
LIST OF TABLES **5**
1 INTRODUCTION **6**
2 ABOUT THIS MANUAL **6**
3 ACRONYMS AND ABBREVIATIONS **7**
4 GETTING STARTED **8**
4.1 SMARTRF STUDIO 7 8
4.2 INSTALLING SMARTRF STUDIO AND USB DRIVERS 8
4.2.1 Cebal USB driver *8*
4.2.2 Virtual COM port USB driver *9*
5 USING THE SMARTRF TRANSCEIVER EVALUATION BOARD **10**
5.1 ABSOLUTE MAXIMUM RATINGS 11
6 SMARTRF TRANSCEIVER EVALUATION BOARD OVERVIEW **12**
6.1 USB MCU 12
6.1.1 SmartRF Mode *14*
6.1.2 UART Mode *14*
6.1.3 Disabled Mode *15*
6.2 MSP430 MCU 16
6.3 POWER SOURCES 16
6.3.1 Battery Power *17*
6.3.2 USB Power *17*
6.3.3 External Power Supply *18*
6.3.4 MSP-FET Power *19*
6.4 LCD 19
6.5 ACCELEROMETER 19
6.6 AMBIENT LIGHT SENSOR 19
6.7 SERIAL FLASH 19
6.8 BUTTONS 20
6.9 LEDS 20
6.9.1 General Purpose LEDs *20*
6.9.2 USB LED *20*
6.10 EM CONNECTORS 21
6.11 BREAKOUT HEADERS AND JUMPERS 22
6.11.1 EM I/O breakout headers *23*
6.11.2 MSP430 I/O breakout *23*
6.12 CURRENT MEASUREMENT JUMPERS 26
7 CONNECTING AN EXTERNAL MCU TO SMARTRF TRXEB **28**
7.1 DISABLE SMARTRF TRXEB MCUS 28
7.2 SELECT POWER SOURCE 28
7.2.1 Power external MCU from SmartRF TrxEB *28*
7.2.2 Power SmartRF TrxEB from external power source *29*
7.3 CONNECT SIGNALS 29
7.3.1 Common signals *29*
7.3.2 Transceiver GPIO signals *30*
8 USING SMARTRF STUDIO WITH COMBO EMS AND SMARTRF TRXEB **31**
9 SMARTRF TRXEB REV. 1.3.0 ..... **32**
9.1 BOARD OVERVIEW 32
9.2 SOFTWARE CONSIDERATIONS 32

9.2.1 Virtual COM port over USB ... 32
9.2.2 Accelerometer ... 32
9.3 USB MCU PIN-OUT ... 33
9.4 MSP430 MCU PIN-OUT ... 33
10 SMARTRF TRXEB REV. 1.5.0 ... 34
10.1 BOARD OVERVIEW ... 34
10.2 CHANGES FROM REV. 1.3.0 ... 34
10.2.1 RC filter on USB MCU reset line ... 34
10.2.2 Accelerometer ... 34
10.2.3 Silk print ... 35
10.3 USB MCU PIN-OUT ... 35
10.4 MSP430 MCU PIN-OUT ... 35
11 UPDATING THE FIRMWARE ... 36
11.1 FORCED BOOT RECOVERY MODE ... 37
12 FREQUENTLY ASKED QUESTIONS ... 38
13 REFERENCES ... 39
14 DOCUMENT HISTORY ... 40

List of Figures

Figure 1 – Install virtual COM port USB driver using the Windows Hardware Wizard 9
Figure 2 – SmartRF TrxEB (rev. 1.5.0) with EM connected 10
Figure 3 – SmartRF TrxEB architecture 12
Figure 4 – Flow chart of the USB MCU bootloader and standard firmware 13
Figure 5 – UART lines connected between the USB MCU and the onboard MSP430 MCU. 15
Figure 6 – Main power selection header (P17) and power switch (P5) 16
Figure 7 – P17 jumper settings to power TrxEB using batteries 17
Figure 8 – P17 jumper settings to power TrxEB via the USB cable 17
Figure 9 – P17 jumper settings to power TrxEB using external power supply 18
Figure 10 – Powering TrxEB via the external power supply connector (P201) 18
Figure 11 – P17 jumper settings to power EB using a MSP-FET 19
Figure 12 – SmartRF TrxEB EM connectors RF1 and RF2 21
Figure 13 – SmartRF TrxEB I/O breakout overview 22
Figure 14 – I/O connector P25A-E PCB layout 23
Figure 15 – MSP430 I/O breakout on SmartRF TrxEB 23
Figure 16 – Current measurement jumpers 26
Figure 17 – Current measurement setup 26
Figure 18 – Switch and jumper settings to disable both SmartRF TrxEB MCUs 28
Figure 19 – Power external MCU board by connecting it to IO_PWR and GND 28
Figure 20 – P7 with strapping to connect external MCU to SmartRF TrxEB 30
Figure 21 – Signal strapping for SmartRF Studio combo EM support on SmartRF TrxEB 31
Figure 22 – Block diagram for SmartRF Studio combo EM support on SmartRF TrxEB 31
Figure 23 – SmartRF TrxEB revision 1.3.0 overview 32
Figure 24 – Accelerometer axes on SmartRF TrxEB rev. 1.3.0 32
Figure 25 – SmartRF TrxEB revision 1.5.0 overview 34
Figure 26 – Accelerometer axes on SmartRF TrxEB rev. 1.5.0 34
Figure 27 – Correct silk print for MCLK and SMCLK test points 35
Figure 28 – Firmware upgrade steps in SmartRF Studio 36
Figure 29 – Enter forced boot recovery mode 37

List of Tables

Table 1 – Available features on the SmartRF TrxEB 6
Table 2 – Supply voltage: Recommended operating conditions and absolute max. ratings 11
Table 3 – Temperature: Recommended operating conditions and storage temperatures 11
Table 4 – SmartRF TrxEB operating modes 14
Table 5 – Data rates supported by the USB MCU in UART Mode 15
Table 6 – USB LED state descriptions 20
Table 7 – EM connector RF1 pin-out 21
Table 8 – EM connector RF2 pin-out 22
Table 9 – MSP430 Port 1-5 pin-out 24
Table 10 – MSP430 Port 6-10 pin-out 25
Table 11 – Component/Power segment overview 27
Table 12 – Strapping overview to connect common signals to an external MCU 29
Table 13 – Strapping overview to transceiver GPIO to an external MCU 30
Table 14 – Signal strapping for SmartRF Studio combo EM support on SmartRF TrxEB 31
Table 15 – USB MCU pin-out on SmartRF TrxEB rev. 1.3.0 33
Table 16 – MSP430 miscellaneous signal pin-out 33

1 Introduction

The SmartRF Transceiver Evaluation Board (SmartRF TrxEB or simply EB) is the motherboard in many development kits for Low Power RF transceiver devices from Texas Instruments. The board has a wide range of features, listed in Table 1 below.

Component	Description
MSP430 MCU	The Ultra-low Power MSP430 serves as a platform for software development, testing and debugging.
Full-speed USB 2.0 interface	Easy plug and play access to full transceiver control using SmartRF™ Studio PC software. Integrated serial port over USB enables communication between onboard MSP430 and PC.
64x128 pixels serial LCD	Big LCD display for demo use and user interface development.
LEDs	Four general purpose LEDs for demo use or debugging.
Serial Flash	External flash for extra storage, over-the-air upgrades and more.
Buttons	Five push-buttons for demo use and user interfacing.
Accelerometer	Three-axis highly configurable digital accelerometer for application development and demo use.
Light Sensor	Ambient Light Sensor for application development and demo use.
Breakout pins	Easy access to GPIO pins for quick and easy debugging.

Table 1 – Available features on the SmartRF TrxEB

2 About this manual

This manual contains reference information about the SmartRF TrxEB.

Chapter 4 will give a quick introduction on how to get started with the SmartRF TrxEB. It describes how to install SmartRF Studio and to get the required USB drivers for the evaluation board. Chapter 5 briefly explains how the EB can be used throughout a project's development cycle. Chapter 6 gives an overview of the various features and functionality provided by the board.

Chapter 9 and 10 provide additional details about the different revisions of SmartRF TrxEB, revision 1.3.0 and 1.5.0, respectively. Chapter 11 gives details on how to update the EB firmware, while a troubleshooting guide is found in chapter 12.

Appendices A, B and C contain the schematics for the different versions of SmartRF TrxEB.

The PC tools SmartRF Studio and SmartRF Flash Programmer have their own user manual.

See chapter 13 for references to relevant documents and web pages.

3 Acronyms and Abbreviations

ACM	Abstract Control Model
ALS	Ambient Light Sensor
CEBAL	CC Evaluation Board Abstraction Layer
CDC	Communication Device Class
CTS	Clear to Send
CW	Continuous Wave
DK	Development Kit
DUT	Device Under Test
EB	Evaluation Board
EM	Evaluation Module
IC	Integrated Circuit
I/O	Input/Output
KB	Kibi Byte (1024 byte)
LCD	Liquid Crystal Display
LED	Light Emitting Diode
LPRF	Low Power RF
MCU	Micro Controller
MISO	Master In, Slave Out (SPI signal)
MOSI	Master Out, Slave In (SPI signal)
NA	Not Applicable / Not Available
NC	Not Connected
PER	Packet Error Rate
RF	Radio Frequency
RX	Receive
RTS	Request to Send
SoC	System on Chip
SPI	Serial Peripheral Interface
TI	Texas Instruments
TrxEB	Transceiver Evaluation Board
TX	Transmit
TRX	Transmit / Receive
UART	Universal Asynchronous Receive Transmit
USB	Universal Serial Bus

4 Getting Started

Before connecting the SmartRF TrxEB to the PC via the USB cable, it is highly recommended to perform the steps described below.

4.1 SmartRF Studio 7

SmartRF Studio is a PC application developed for configuration and evaluation of many of the RF-IC products from Texas Instruments. The application is designed for use with SmartRF Evaluation Boards, such as SmartRF TrxEB, and runs on Microsoft Windows operating systems.

SmartRF Studio lets you explore and experiment with the RF-ICs as it gives full overview and access to the devices' registers to configure the radio and has a control interface for simple radio operation from the PC.

This means that SmartRF Studio will help radio system designers to easily evaluate the RF-IC at an early stage in the design process. It also offers a flexible code export function of radio register settings for software developers.

The latest version of SmartRF Studio can be downloaded from the Texas Instruments website [1], where you will also find a complete user manual.

4.2 Installing SmartRF Studio and USB drivers

Before your PC can communicate with the SmartRF TrxEB over USB, you will need to install the USB drivers for the EB. The latest SmartRF Studio installer [1] includes USB drivers both for Windows x86 and Windows x64 platforms.

After you have downloaded SmartRF Studio from the web, extract the zip-file, run the installer and follow the instructions. Select the complete installation to include the SmartRF Studio program, the SmartRF Studio documentation and the necessary drivers needed to communicate with the SmartRF TrxEB.

4.2.1 Cebal USB driver

NOTE: The SmartRF TrxEB must be in "SmartRF Mode" in order to be recognized by the drivers installed with the SmartRF Studio installer. The EB is in SmartRF Mode when hardware switches S1 and S2 are in positions "SmartRF" and "Enable", respectively. See section 6.1 for more information about the SmartRF TrxEB operating modes.

SmartRF PC software such as SmartRF Studio uses a proprietary USB driver, Cebal, to communicate with evaluation boards. Connect your SmartRF TrxEB to the computer with a USB cable and turn it on. If you did a complete install of SmartRF Studio, Windows will recognize the device automatically and the SmartRF TrxEB is ready for use!

For more information regarding the USB drivers, please consult the SmartRF Studio documentation, the USB driver installation guide [2] or chapter 11.

4.2.2 Virtual COM port USB driver

NOTE: The SmartRF TrxEB must be in "UART Mode" in order to be recognized as a virtual COM port. The EB is in UART Mode when hardware switches S1 and S2 are in positions "UART" and "Enable", respectively. See section 6.1 for more information about the SmartRF TrxEB operating modes.

If you are using SmartRF TrxEB in UART Mode (see section 6.1.2), a standard driver for a virtual COM port over USB is used (USB CDC-ACM). If you did a complete install of SmartRF Studio, Windows will recognize the device automatically. If prompted with the Windows Hardware Wizard, select "Install the software automatically (recommended)" and click next to finish the installation. The SmartRF TrxEB is now ready for use!

If the SmartRF TrxEB CDC-ACM driver is not found by the Hardware Wizard, make sure you have installed the latest version of SmartRF Studio [1]. In the Windows Hardware Wizard, select "Install from a list or specific location (Advanced)". You will see below window.

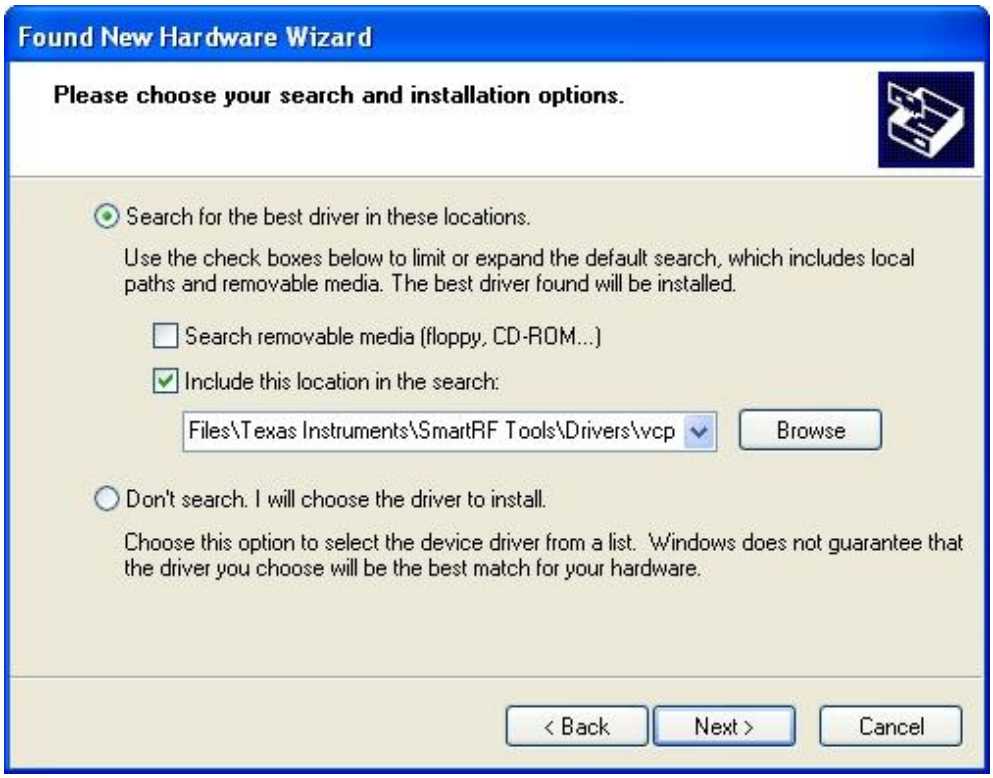

Figure 1 – Install virtual COM port USB driver using the Windows Hardware Wizard

The driver for the Virtual COM Port (VCP) is typically located in the directory *C:\Program Files\Texas Instruments\SmartRF Tools\Drivers\vcp*, where *C:\Program Files\Texas Instruments\SmartRF Tools* is the root installation directory for SmartRF Tools such as SmartRF Studio. The path may be different if you have chosen a different installation directory for SmartRF Studio.

If the above fails, select "Don't Search. I will choose the driver to install." A new window will open, asking for a location of where the drivers can be found. Locate the *trxeb_cdc_uart.inf* file and select that driver for installation.

5 Using the SmartRF Transceiver Evaluation Board

The SmartRF TrxEB is a flexible test and development platform that works together with RF Evaluation Modules from Texas Instruments.

An Evaluation Module is a small RF module with RF chip, balun, matching filter, SMA antenna connector and I/O connectors. The modules can be plugged into the SmartRF TrxEB which lets the PC take direct control of the RF device on the EM over the USB interface.

Currently, SmartRF TrxEB supports:

- CC1120EM
- CC1121EM
- CC2520EM
- CC1101EM
- CC1100EM
- CC1100EEM
- CC110LEM
- CC113LEM
- CC115LEM

SmartRF TrxEB is included in e.g. the CC1120 development kit. Some of the above EMs comes in variants combined with a RF front-end such as CC1190 or CC2590/CC2591. Such variants are called combo EMs and are also supported by the SmartRF TrxEB. See chapter 8 for details on how to use SmartRF TrxEB rev. ≤1.5.0 to control a combo EM using SmartRF Studio.

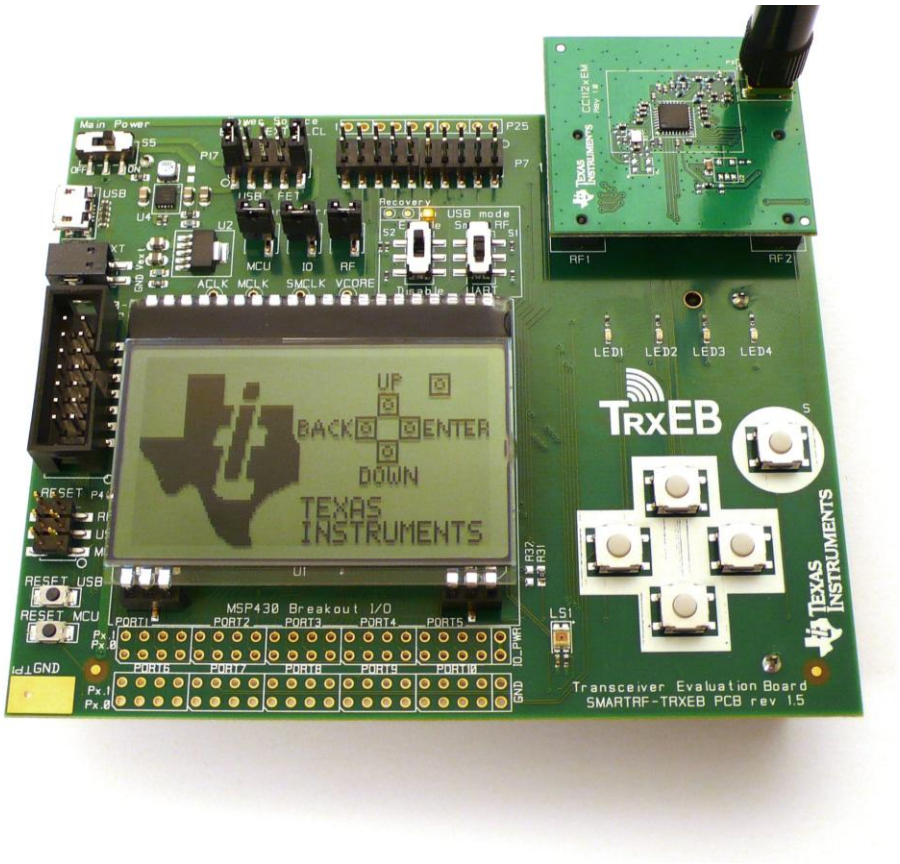

Figure 2 – SmartRF TrxEB (rev. 1.5.0) with EM connected

The PC software that controls the SmartRF TrxEB + EM is SmartRF Studio. Studio can be used to perform several RF tests and measurements, e.g. to set up a CW signal and send/receive packets.

The EB+EM can be of great help during the whole development cycle for a new RF product.

- Perform comparative studies. Compare results obtained with EB+EM with results from your own system.
- Perform basic functional tests of your own hardware by connecting the radio on your board to SmartRF TrxEB. SmartRF Studio can be used to exercise the radio.
- Verify your own software with known good RF hardware, by simply connecting your own microcontroller to an EM via the EB. Test the send function by transmitting packets from your SW and receive with another board using SmartRF Studio. Then transmit using SmartRF Studio and receive with your own software.
- The SmartRF TrxEB can also be used as a debugger interface to the SoCs from IAR Embedded Workbench for 8051.
- Develop code to the onboard MSP430 MCU and use the SmartRF TrxEB as a standalone board without PC tools.

5.1 Absolute maximum ratings

The minimum and maximum operating supply voltages and absolute maximum ratings for the active components onboard the SmartRF TrxEB are summarized in Table 2. Table 3 lists the recommended operating temperature and storage temperature ratings. Please refer to the respective component's datasheet for further details.

Component	Operating voltage		Absolute max. rating	
	Min. [V]	Max. [V]	Min. [V]	Max. [V]
USB MCU [3]	+3.0	+3.6	-0.3	+3.9
MSP 430 MCU [6]	+1.8	+3.6	-0.3	+4.1
LCD [7]	+3.0	+3.3	-0.3	+3.6
Accelerometer [8]	+1.7	+3.6	-0.3	+3.6
Ambient light sensor [9]	+2.3	+5.5	NA	+6
Serial Flash [10]	+2.7	+3.6	-0.4	+4.0

Table 2 – Supply voltage: Recommended operating conditions and absolute max. ratings

Component	Operating temperature		Storage temperature	
	Min. [˚C]	Max. [˚C]	Min. [˚C]	Max. [˚C]
USB MCU [3]	0	+85	-50	+150
MSP 430 MCU [6]	-40	+85	-55	+105
LCD [7]	-20	+70	-30	+80
Accelerometer [8]	-40	+85	-40	+125
Ambient light sensor [9]	-40	+85	-40	+85
Serial Flash [10]	-40	+85	-65	+150

Table 3 – Temperature: Recommended operating conditions and storage temperatures

6 SmartRF Transceiver Evaluation Board Overview

SmartRF TrxEB acts as the motherboard in several development kits for Low Power RF ICs from Texas Instruments. The board has several user interfaces and connections to external interfaces, allowing fast prototyping and testing of both software and hardware.

This chapter will give an overview of the general architecture of the board and describe the available I/O. The following sub-sections will explain the I/O in more detail. Pin connections between the evaluation board I/O and EM can be found in section 6.10.

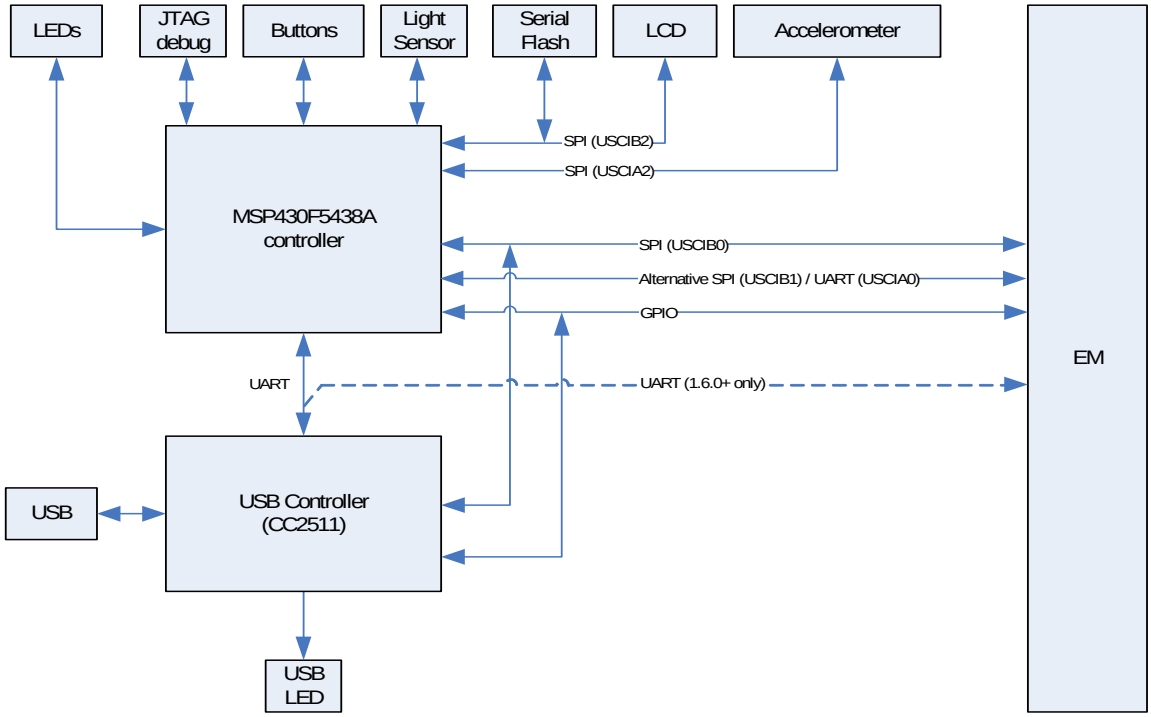

Figure 3 – SmartRF TrxEB architecture

NOTE: Signal names used in this user's guide and in the SmartRF TrxEB schematics, are named "as seen" from the onboard MSP430 MCU. E.g. signal name "P1_3" refers to the signal connected to MSP430 port 1, pin 3.

6.1 USB MCU

The USB MCU is the CC2511F32 from Texas Instruments. Please see the CC2511 product page [3] on the TI web for detailed information about this controller. The recommended operating condition for the CC2511 is a supply voltage between 3.0 V and 3.6 V. The min (max) operating temperature is 0 (+85) ˚C.

The USB controller is programmed with a bootloader and the standard SmartRF TrxEB firmware when it is shipped from the factory. A flow chart over the USB MCU bootloader and standard firmware is shown in Figure 4.

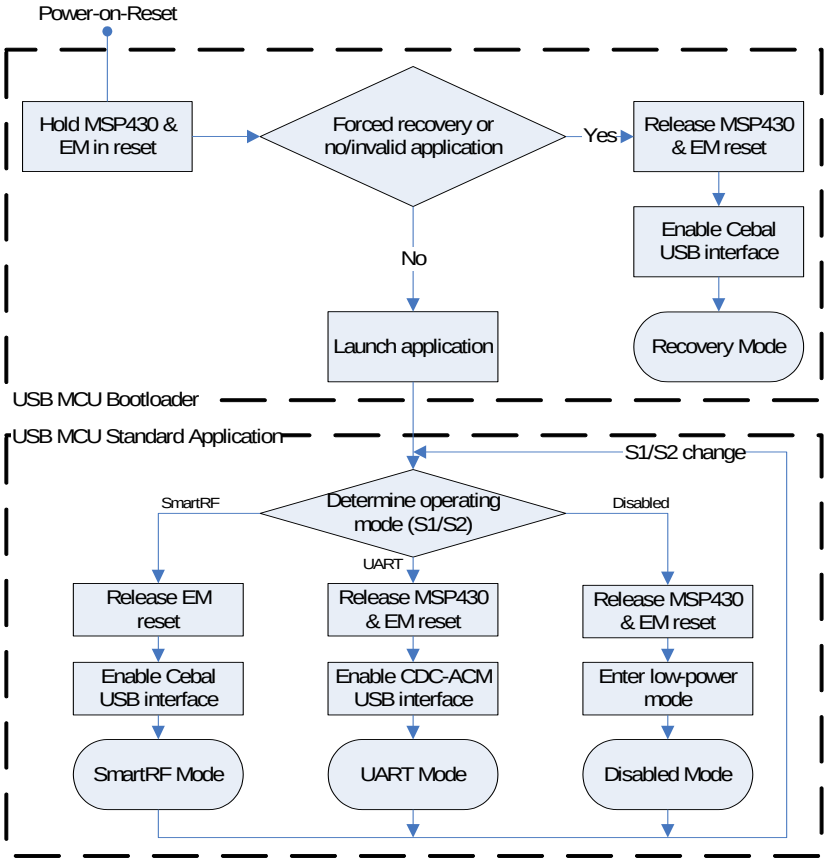

Figure 4 – Flow chart of the USB MCU bootloader and standard firmware

When the bootloader starts running, it will check for a valid application in the CC2511 flash memory. If detection is successful, the application is started and the board can be operated normally. If no application is detected (e.g. blank flash or firmware upgrade failed) the USB LED (D6) will start blinking rapidly – indicating failure. See section 6.9.2 for more details on USB LED states.

The USB MCU bootloader will allow programming/upgrading of the USB MCU firmware over the USB interface. No additional hardware or programmers are needed. Both SmartRF Studio and SmartRF Flash Programmer [4] can be used for this purpose. Please refer to chapter 11 for details.

The standard firmware application has three operating modes, controlled by hardware switches S1 and S2. The three modes are named “SmartRF Mode”, “UART Mode” and “Disabled Mode”. Table 4 shows which S1 and S2 positions that give the different operation modes. The following sections will discuss the different operating modes in more detail.

	S2	S1	Operating Mode	Key features
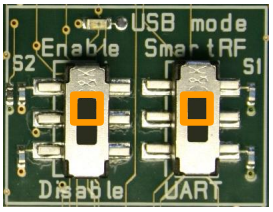	Enable	SmartRF	SmartRF Mode	- Cebal USB interface - MSP430 disabled - Control RF-IC using SmartRF PC software
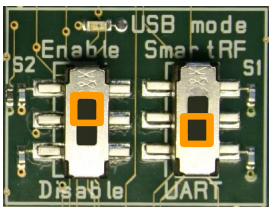	Enable	UART	UART Mode	- CDC-ACM USB interface - MSP430 enabled - UART bridge between PC and MSP430 - Control RF-IC using MSP430 or external MCU
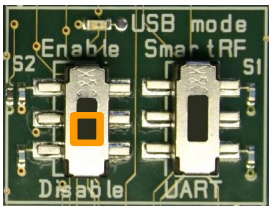	Disable	x	Disabled Mode	- USB interface disabled - MSP430 enabled - Control RF-IC using MSP430 or external MCU

Table 4 – SmartRF TrxEB operating modes

6.1.1 SmartRF Mode

SmartRF Mode is the standard operating mode and is obtained by setting hardware switches S1 and S2 on the EB to “SmartRF” and “Enable”, respectively (see Table 4).

In SmartRF mode the EB is recognized over USB as a Cebal device, enabling PC software like SmartRF Studio to configure and control the RF-IC connected to the EB’s EM connectors.

The onboard MSP430 microcontroller is in this operating mode held in reset by the USB MCU.

6.1.2 UART Mode

UART Mode is obtained by setting hardware switches S1 and S2 on the EB to “UART” and “Enable”, respectively (see Table 4).

In UART mode, the EB is recognized over USB as a virtual serial port (CDC-ACM). The USB MCU works as a UART bridge between the onboard MSP430 and the PC. The hardware connection between the USB MCU and the MSP430 is shown in Figure 5. The supported data rates are listed in Table 5.

It is not possible to use SmartRF Studio or other PC software to communicate with a connected RF-IC when operating in UART Mode. To communicate with a connected RF-IC, the onboard MSP430 or an external MCU must be programmed with custom firmware. Please refer to the MSP430 User’s Guide [5] for more information about the MSP430 MCU.

Data rate [baud]
9 600
38 400
56 700
115 200

Table 5 – Data rates supported by the USB MCU in UART Mode

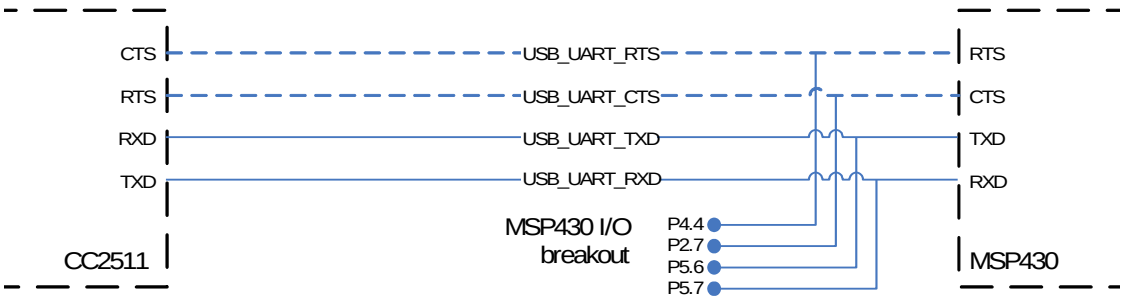

Figure 5 – UART lines connected between the USB MCU and the onboard MSP430 MCU. CTS and RTS lines are dotted to indicate that the USB MCU standard firmware only implements a two-line UART interface to the MSP430 MCU.

NOTE: Figure 5 shows the four hardware connected UART lines the USB MCU and the MSP430 MCU. The MSP430 does not support hardware flow control (RTS and CTS lines). Such support must be manually implemented in the MSP430 software. To ease MSP430 application development, the standard USB MCU firmware uses a two-line UART interface to the MSP430, i.e. hardware flow control is not implemented.

6.1.3 Disabled Mode

Disabled Mode is obtained by setting hardware switch S2 on the EB to “Disable” position (see Table 4). The position of S1 is disregarded by the USB MCU when S2 is in the “Disable” position.

In Disabled Mode, the USB MCU is in power-down mode and no USB communication is possible between a PC and the EB. It is however still possible to power the EB via the USB cable, see section 6.3.2.

6.2 MSP430 MCU

The SmartRF TrxEB is equipped with a MSP430F5438A micro controller from Texas Instruments. Please see the MSP430F5438A product page [6] on the TI website for detailed information about this controller.

All of the EB's user interface peripherals are available to the MSP430 (Figure 3 on page 12). Excluding the EM, the list of available peripherals consists of

- LCD
- 5x Buttons
- 4x LEDs
- Ambient Light Sensor
- Accelerometer
- SPI Flash.

The recommended operating condition for the MSP430 is a supply voltage (V_{CC}) between 1.8 V and 3.6 V. The min (max) operating temperature is -40 (+85) ˚C.

NOTE: The onboard MSP430 MCU is held in reset by the USB MCU in SmartRF Mode. In order to use the MSP430, make sure the USB MCU is set to Disabled Mode or UART Mode. See section 6.1 for details.

6.3 Power Sources

There are four possible solutions for applying power to the SmartRF TrxEB; batteries, USB bus, external power supply and MSP-FET. The power source can be selected using the power source selection jumpers on header P17 (Figure 6). The main power supply switch (S5) turns off all power sources.

Figure 6 – Main power selection header (P17) and power switch (P5)

WARNING! Do not use multiple power sources to power the SmartRF TrxEB at the same time. Doing so may lead to excessive currents, causing onboard components to break.

WARNING! When using the SmartRF TrxEB with a MSP430 debugger (e.g. MSP-FET430UIF), while powering the EB with a different power source (batteries, USB or external power supply), a jumper should short circuit pin 9-10 of header P17 ("LCL"). This will prevent the MSP-FET from supplying power to the EB.

6.3.1 Battery Power

The SmartRF TrxEB includes a battery holder for two 1.5 V AA batteries on the reverse side of the PCB. Normal AA batteries can be used and the onboard regulator supplies 3.3 V to the board. The power source selection jumpers should short circuit pin 1-2 (“BATT”) and 9-10 (“LCL”) of header P17, see Figure 7.

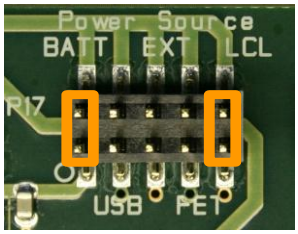

Figure 7 – P17 jumper settings to power TrxEB using batteries

The maximum current consumption is limited by the regulator to 800 mA.

6.3.2 USB Power

When the SmartRF TrxEB is connected to a PC via a USB cable, it can draw power from the USB bus. The onboard voltage regulator supplies approximately 3.3 V to the board. The power source selection jumpers should short circuit pin 3-4 (“USB”) and 9-10 (“LCL”) of header P17 (Figure 8).

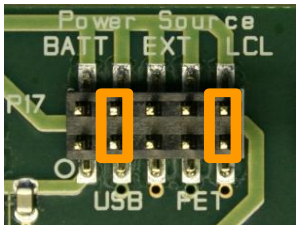

Figure 8 – P17 jumper settings to power TrxEB via the USB cable

The maximum current consumption is limited by the regulator to 1500 mA[1].

[1] Note that most USB power sources are limited to 500 mA.

6.3.3 External Power Supply

The SmartRF TrxEB has a connector for powering the board using an external power supply. The power source selection jumpers should short circuit pin 5-6 ("EXT") and 9-10 ("LCL") of header P16 as shown in Figure 9.

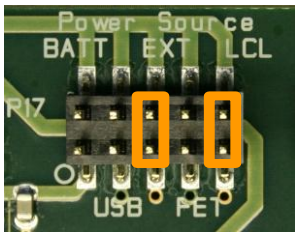

Figure 9 – P17 jumper settings to power TrxEB using external power supply

> **WARNING!** When using an external power source, all onboard voltage regulators are bypassed. There is a risk of damaging the onboard components if the applied voltage on the external power connector/header is lower than -0.3 V or higher than 3.6 V (combined absolute maximum ratings for onboard components. See section 5.1 for further information.

The external supply's ground should be connected to pin 2 of P201. Apply a voltage in the range from 3.0 V to 3.3 V to pin 1 (see Figure 10). Pin 1 and pin 2 of P201 are marked "Vext" and "GND", respectively, on SmartRF TrxEB revision 1.5.0.

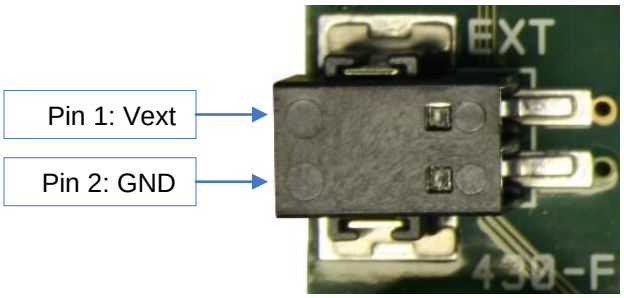

Figure 10 – Powering TrxEB via the external power supply connector (P201)

6.3.4 MSP-FET Power

The SmartRF TrxEB can be powered via a MSP430 debugger such as MSP-FET430UIF. The power source selection jumpers should in that case short circuit pin 7-8 of header P17 (Figure 11). Note that the MSP-FET will not power the EB if pin 9-10 of header P17 ("LCL") is short circuited.

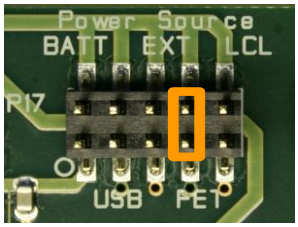

Figure 11 – P17 jumper settings to power EB using a MSP-FET

6.4 LCD

The SmartRF TrxEB comes with a 128x64 pixels display from Electronic Assembly (DOGM128E-6) [7]. The LCD display is available to the onboard MSP430 via an SPI interface, enabling software development of user interfaces and demo use. The LCD display shares SPI interface with the serial flash device (section 6.7).

The recommended operating condition for the LCD display is a supply voltage between 3.0 V and 3.3 V. The min (max) operating temperature is -20 (+70) ˚C.

6.5 Accelerometer

The SmartRF TrxEB is equipped with a digital accelerometer from VTI Technologies (CMA3000-D01) [8]. The accelerometer is available to the onboard MSP430 MCU via an SPI interface and has a dedicated interrupt line to the MCU. The onboard accelerometer is suitable for application development, prototyping and demo use. See sections 9.2.2 and 10.2.2 for details on accelerometer axis orientation for EB revision 1.3.0 and 1.5.0, respectively.

The recommended operating condition for the accelerometer is a supply voltage between 1.7 V and 3.6 V. The min (max) operating temperature is -40 (+85) ˚C.

6.6 Ambient Light Sensor

The SmartRF TrxEB has an analog SFH 5711 ambient light sensor from Osram [9] that is available to the onboard MSP430, enabling quick application development for demo use and prototyping. The light sensor is placed outside the bottom right corner of the LCD display.

The recommended operating condition for the ambient light sensor is a supply voltage between 2.3 V and 5.5 V. The min (max) operating temperature is -40 (+85) ˚C.

6.7 Serial Flash

SmartRF TrxEB has a M25PE20 flash device – a paged 256 KB serial flash memory from Micron [10]. The device gives the MSP430 access to extra flash, enabling over-the-air upgrades and more. The serial device shares SPI bus with the LCD display (section 6.4).

The recommended operating condition for the serial flash device is a supply voltage between 2.7 V and 3.6 V. The min (max) operating temperature is -40 (+85) ˚C.

6.8 Buttons

There are 7 buttons on the SmartRF TrxEB. Status of BTN_LEFT, BTN_RIGHT, BTN_UP, BTN_DOWN and BTN_SELECT can be read by the onboard MSP430. These buttons are intended for user interfacing and development of demo applications.

The RESET MCU button resets the MSP430 MCU by pulling its reset line low (MCU_RESET_N). The RESET USB button similarly resets the USB controller (pulling USB_RESET_N low). Note that the standard firmware on the USB controller will reset the EM and MSP430 during startup, so pushing the RESET USB button also resets the controller on the EM board and the MSP430.

6.9 LEDs

6.9.1 General Purpose LEDs

The four LEDs D3, D4, D5, D7 can be controlled from the onboard MSP430 and are suitable for demo use and debugging. The LEDs are active low.

6.9.2 USB LED

LED D6 (USB LED) is controlled by the USB controller and is used to indicate the status of the EB. The USB LED has several states, listed in Table 6.

USB LED state	Description
OFF	Power is turned off, the USB controller is in Disabled Mode or the software on the USB controller is corrupt.
ON	**SmartRF Mode:** The standard firmware is running and a RF-IC has been detected. **UART Mode:** The standard firmware is running. The USB LED is quickly toggled OFF/ON when UART traffic. This is typically seen as slight variations in emitted intensity.
BLINKING (100 ms ON – 900 ms OFF)	**SmartRF Mode:** No RF-IC is detected.
BLINKING (1 Hz)	The USB MCU has entered the boot recovery mode. See chapter 11 for further details.
BLINKING (10 Hz)	The bootloader on the USB MCU could not find a valid application to boot. Basic USB services are available and both SmartRF Studio and SmartRF Flash Programmer can be used to program an application to the USB controller's flash. See chapter 11 for further details.

Table 6 – USB LED state descriptions

6.10 EM Connectors

The EM connectors, shown in Figure 12, are used for connecting an EM board to the SmartRF TrxEB. The connectors RF1 and RF2 are the main interface and are designed to inhibit incorrect mounting of the EM board. The pin-out of the EM connectors is given in Table 7 and Table 8. Many EM connector pins are accessible from both the EM I/O breakout headers (see section 6.11.1) and the MSP430 I/O breakout (section 6.11.2).

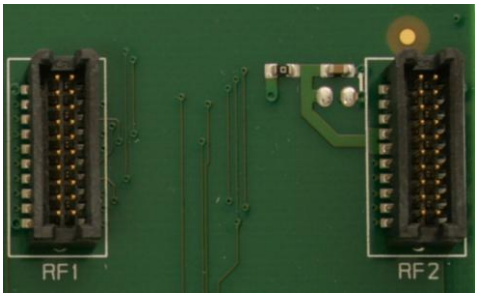

Figure 12 – SmartRF TrxEB EM connectors RF1 and RF2

EM pin	Signal name	Description	I/O breakout	
			EM	MSP430
RF1.1	GND	Ground	P7.20	
RF1.2	NC	Not connected		
RF1.3	P1_4 / RF_SPI1_CS_N	GPIO / Alternative EM SPI Clock	P7.5	P1.4
RF1.4	P1_1	GPIO signal to EM board	P7.2	P1.1
RF1.5	P8_2	GPIO signal to EM board	P7.13	P8.2
RF1.6	P1_5	GPIO signal to EM board	P7.6	P1.5
RF1.7	RF_UART_TXD / RF_SPI1_MISO	2-line UART to EM board / Alt. SPI	P7.9	P3.4 / P5.4
RF1.8	P25A_1	GPIO signal	P25A.1	
RF1.9	RF_UART_RXD / RF_SPI1_MOSI	2-line UART to EM board / Alt. SPI	P7.7	P3.5 / P3.7
RF1.10	P1_7	GPIO signal to EM board	P7.8	P1.7
RF1.11	P8_3	GPIO signal to EM board	P7.15	P8.3
RF1.12	P1_3	GPIO signal to EM board	P7.4	P1.3
RF1.13	P25A_2	GPIO signal	P25A.2	
RF1.14	RF_SPI0_CS_N	EM SPI Chip Select	P7.14	P3.0
RF1.15	P8_4	GPIO signal to EM board	P7.17	P8.4
RF1.16	RF_SPI0_SCLK	EM SPI Clock	P7.12	P3.3
RF1.17	P8_5	GPIO signal to EM board	P7.19	P8.5
RF1.18	RF_SPI0_MOSI	EM SPI MOSI	P7.16	P3.1
RF1.19	GND	Ground	P7.20	
RF1.20	RF_SPI0_MISO	EM_SPI_MISO	P7.18	P3.2

Table 7 – EM connector RF1 pin-out

EM pin	Signal name	Description	I/O breakout	
			EM	MSP430
RF2.1	NC	Not connected		
RF2.2	GND	Ground	P7.20	
RF2.3	NC	Not connected		
RF2.4	NC	Not connected		
RF2.5	NC	Not connected		
RF2.6	P25C_1	GPIO signal	P25C.1	
RF2.7	RF_PWR	EM power		
RF2.8	P25C_2	GPIO signal	P25C.2	
RF2.9	RF_PWR	EM power		
RF2.10	P25D_1	GPIO signal	P25D.1	
RF2.11	P25B_1	GPIO signal	P25B.1	
RF2.12	P25D_2	GPIO signal	P25D.2	
RF2.13	P25B_2	GPIO signal	P25B.2	
RF2.14	P25E_1	GPIO signal	P25E.1	
RF2.15	RF_RESET_N	Signal used to reset EM board	P7.10	P8.0
RF2.16	NC	Not connected		
RF2.17	P8_1	GPIO signal to EM board	P7.11	P8.1
RF2.18	P1_2 / RF_SPI1_SCLK	GPIO signal to EM board / Alt. SPI	P7.3	P1.2
RF2.19	P1_0	GPIO signal to EM board	P7.1	P1.0
RF2.20	NC	Not connected		

Table 8 – EM connector RF2 pin-out

6.11 Breakout Headers and Jumpers

Header P7 and P25A-E give access to main EM connector pins, while P11, P14, P16 and P18-P24 give access to the MSP430 I/O (section 6.11.2). Some signals can be accessed from both the EM I/O breakout headers and the MSP430 I/O breakout as indicated by Figure 13.

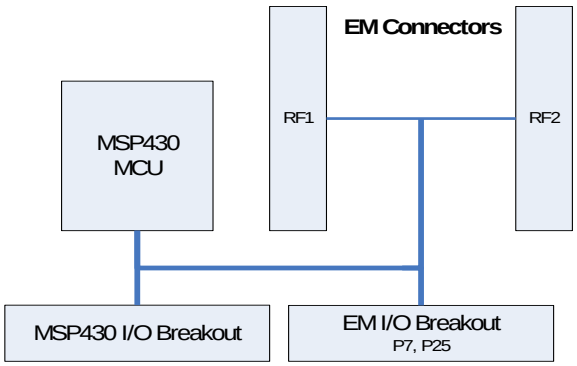

Figure 13 – SmartRF TrxEB I/O breakout overview

6.11.1 EM I/O breakout headers

The EM I/O breakout headers on SmartRF TrxEB consist of header P7 and I/O connector P25. P25 is made out of five 2-pin connectors (P25A-E). The layout of these connectors is shown in Figure 14. Table 7 and Table 8 in section 6.10 shows how the EM I/O connector headers are mapped to EM connector RF1 and RF2, respectively.

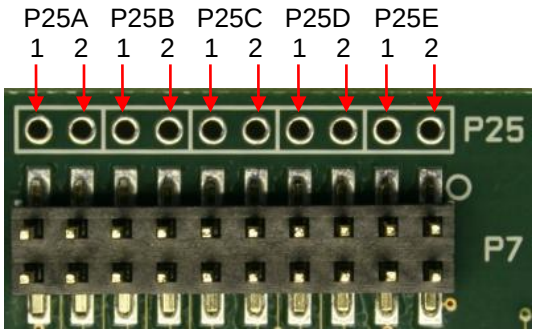

Figure 14 – I/O connector P25A-E PCB layout

6.11.2 MSP430 I/O breakout

MSP430 ports 1-10 are on SmartRF TrxEB available through the MSP430 I/O breakout shown in Figure 15. Table 9 lists I/O breakout for ports 1-5, while Table 10 covers ports 6-10. Both tables indicate if the given MSP430 pin is connected to an EM connector pin. For additional info on the MSP430 pin-out on SmartRF TrxEB, please refer to section 9.4.

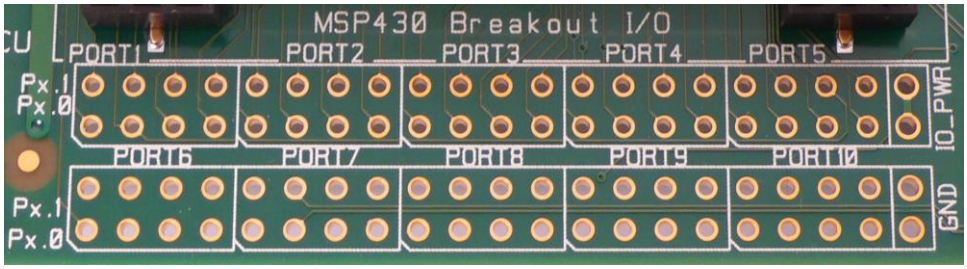

Figure 15 – MSP430 I/O breakout on SmartRF TrxEB

MSP430	Signal Name	Description	EM pin
P1.0	P1_0	Unused GPIO	RF2.19
P1.1	P1_1	GPIO signal to EM board	RF1.4
P1.2	P1_2 / RF_SPI1_SCLK	Alternative EM SPI Clock	RF2.18
P1.3	P1_3	GPIO signal to EM board	RF1.12
P1.4	P1_4 / RF_SPI1_CS_N	Alternative EM SPI Chip Select	RF1.3
P1.5	P1_5	GPIO signal to EM board	RF1.6
P1.6	P1_6	Unused GPIO	
P1.7	P1_7	GPIO signal to EM board	RF1.10
P2.0	ACC_INT	Accelerometer interrupt line	
P2.1	BTN_LEFT	Left button input line	
P2.2	BTN_RIGHT	Right button input line	
P2.3	BTN_SELECT	Select button input line	
P2.4	BTN_UP	Up button input line	
P2.5	BTN_DOWN	Down button input line	
P2.6	P2_6	Unused GPIO	
P2.7	USB_UART_CTS	CTS line to USB MCU	
P3.0	RF_SPI0_CS_N	EM SPI Chip Select	RF1.14
P3.1	RF_SPI0_MOSI	EM SPI MOSI	RF1.18
P3.2	RF_SPI0_MISO	EM SPI MISO	RF1.20
P3.3	RF_SPI0_SCLK	EM SPI Clock	RF1.16
P3.4	RF_UART_TXD / RF_SPI1_MISO	2-line UART to EM board	RF1.7
P3.5	RF_UART_RXD / RF_SPI1_MOSI	2-line UART to EM board	RF1.9
P3.6	LCD_BL	LCD backlight module enable line [2]	
P3.7	RF_UART_RXD / RF_SPI1_MOSI	Alternative EM SPI MOSI	RF1.9
P4.0	LED_1	General purpose LED 1 line	
P4.1	LED_2	General purpose LED 2 line	
P4.2	LED_3	General purpose LED 3 line	
P4.3	LED_4	General purpose LED 4 line	
P4.4	USB_UART_RTS	RTS line to USB MCU	
P4.5	P4_5	Unused GPIO	
P4.6	P4_6	Unused GPIO	
P4.7	P4_7	Unused GPIO	
P5.0	P5_0	GPIO or VREF+	
P5.1	P5_1	GPIO or VREF-	
P5.2	P5_2 / XT2IN	Unused GPIO / External crystal oscillator line	
P5.3	P5_3 / XT2OUT	Unused GPIO / External crystal oscillator line	
P5.4	RF_UART_TXD / RF_SPI1_MISO	Alternative EM SPI MISO	RF1.7
P5.5	P1_2 / RF_SPI1_SCLK	Alternative EM SPI Clock	RF2.18
P5.6	USB_UART_TXD	TXD line to USB MCU	
P5.7	USB_UART_RXD	RXD line to USB MCU	

Table 9 – MSP430 Port 1-5 pin-out

[2] LCD backlight module is not included. Additional components needed to use backlight module.

MSP430	Signal Name	Description	EM pin
P6.0	ACC_PWR	Accelerometer power, enable high	
P6.1	ALS_PWR	Ambient light sensor power, enable high	
P6.2	ALS_OUT	Ambient light sensor output line	
P6.3	P6_3	Unused GPIO	
P6.4	P6_4	Unused GPIO	
P6.5	P6_5	Unused GPIO	
P6.6	P6_6	Unused GPIO	
P6.7	P6_7	Unused GPIO	
P7.0	P7_0 / XIN	External crystal oscillator line	
P7.1	P7_1 / XOUT	External crystal oscillator line	
P7.2	FLASH_RESET_N	Serial flash reset line, active low	
P7.3	LCD_RESET_N	LCD reset line, active low	
P7.4	P7_4	Unused GPIO	
P7.5	P7_5	Unused GPIO	
P7.6	FLASH_PWR	Serial flash power, enable high	
P7.7	LCD_PWR	LCD power, enable high	
P8.0	RF_RESET_N	Signal used to reset EM board	RF2.15
P8.1	P8_1	GPIO signal to EM board	RF2.17
P8.2	P8_2	GPIO signal to EM board	RF1.5
P8.3	P8_3	GPIO signal to EM board	RF1.11
P8.4	P8_4	GPIO signal to EM board	RF1.15
P8.5	P8_5	GPIO signal to EM board	RF1.17
P8.6	FLASH_CS_N	SPI Chip Select for serial flash, active low	
P8.7	ACC_CS_N	SPI Chip Select for accelerometer, active low	
P9.0	IO_SPI1_SCLK	SPI Clock (interface shared by LCD, serial flash)	
P9.1	IO_SPI0_MOSI	SPI MOSI (interface used by accelerometer)	
P9.2	IO_SPI0_MISO	SPI MISO (interface used by accelerometer)	
P9.3	IO_SPI0_SCLK	SPI SCLK (interface used by accelerometer)	
P9.4	IO_SPI1_MOSI	SPI MOSI (interface shared by LCD, serial flash)	
P9.5	IO_SPI1_MISO	SPI MISO (interface shared by LCD, serial flash)	
P9.6	LCD_CS_N	SPI Chip Select for LCD, active low	
P9.7	LCD_MODE	LCD mode select signal [7]	
P10.0	P10_0	Unused GPIO	
P10.1	P10_1	Unused GPIO	
P10.2	P10_2	Unused GPIO	
P10.3	P10_3	Unused GPIO	
P10.4	P10_4	Unused GPIO	
P10.5	P10_5	Unused GPIO	
P10.6	P10_6	Unused GPIO	
P10.7	P10_7	Unused GPIO	

Table 10 – MSP430 Port 6-10 pin-out

6.12 Current Measurement Jumpers

SmartRF TrxEB has three current measurement jumpers, MCU_PWR, IO_PWR and RF_PWR, as shown in Figure 16. By removing one of the jumpers, an ammeter can easily be connected to the board and perform current consumption measurements on the different segments of the EB. Similarly, a separate, regulated power supply for the EM can be connected. Table 11 shows an overview of what onboard components are connected to which power segment.

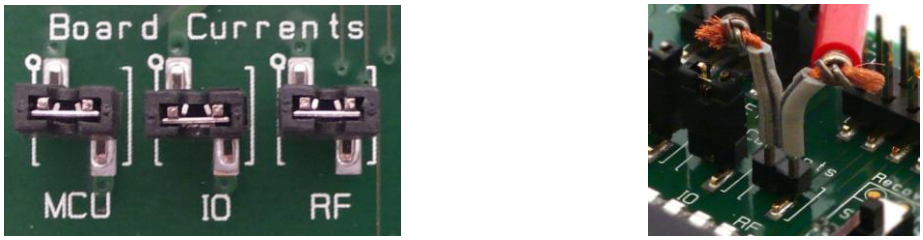

Figure 16 – Current measurement jumpers

If the EM is powered by a different source than the rest of the board, the same voltage should be used on the EM as on the EB. The digital signals between the EB and the EM are not isolated from each other, and different voltage levels can cause excessive current consumption or erroneous interaction between the EB and the EM.

NOTE: On SmartRF TrxEB revision 1.3.0, the “IO” and “RF” silk print is switched around. For all revisions, IO and RF current should be measured on the jumpers indicated by the silk print in Figure 16. See chapter 9 for details about EB revision 1.3.0.

Figure 17 – Current measurement setup

Component	Default power	Alternative power
Evaluation Module	RF_PWR	NA
MSP430 MCU	MCU_PWR	NA
USB MCU	IO_PWR	NA
General Purpose LEDs	IO_PWR	NA
USB LED	IO_PWR	NA
Accelerometer	MCU_PWR (MSP430 P6.0)	NA
Ambient Light Sensor	MCU_PWR (MSP430 P6.1)	NA
SPI Flash	MCU_PWR (MSP430 P7.6)	IO_PWR (swap R17/R18)
LCD	MCU_PWR (MSP430 P7.7)	IO_PWR (swap R29/R30)

Table 11 – Component/Power segment overview

7 Connecting an external MCU to SmartRF TrxEB

You can easily connect an external MCU to a SmartRF TrxEB and use it to control the EM board mounted on the TrxEB. This chapter gives a quick overview over the signals that must be connected to enable your external MCU to control the EM.

7.1 Disable SmartRF TrxEB MCUs

To avoid any signal conflicts between the MCUs onboard the SmartRF TrxEB (MSP430 and USB MCU) and the external MCU, both onboard MCUs should be disabled.

Disable the USB MCU by setting mode selection switch S2 to “Disable” position (Figure 18a).

To hold the onboard MSP430 MCU in reset state, short circuit pins 1-2 on header P4 as shown in Figure 18b. An alternative, more power efficient option is to program the onboard MSP430 with you own, custom software which configures the MSP430 pins to minimize current consumption and makes the MSP430 enter a low-power mode [5].

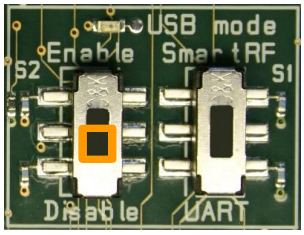

a) Disable USB MCU

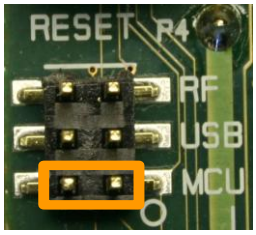

b) Hold MSP430 in reset

Figure 18 – Switch and jumper settings to disable both SmartRF TrxEB MCUs

7.2 Select power source

When connecting an external MCU board to the SmartRF TrxEB, there are typically two options for powering the boards, both consisting of sharing a power source. The first is to let the external MCU board draw power from the SmartRF TrxEB; the second is to power the SmartRF TrxEB from an external power source. It is in both cases important that the voltage levels on shared signals are the same.

7.2.1 Power external MCU from SmartRF TrxEB

Power the external MCU board by connecting it to IO_PWR (P9) and GND (P6) on SmartRF TrxEB, shown in Figure 19.

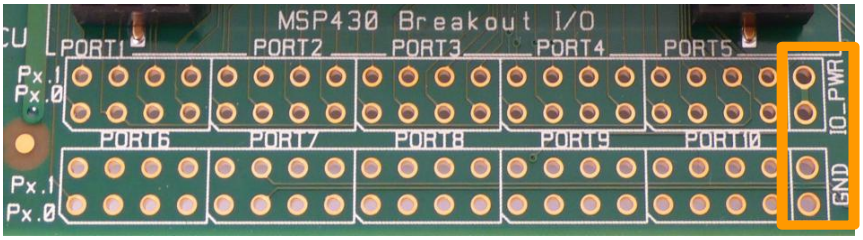

Figure 19 – Power external MCU board by connecting it to IO_PWR and GND

7.2.2 Power SmartRF TrxEB from external power source

Connect the power from the external power source to the external power source connector on SmartRF TrxEB and set the power source selection jumpers accordingly. Please see section 6.3.3 for a detailed description on how to power the SmartRF TrxEB from an external power source.

NOTE: When powering the SmartRF TrxEB from an external power source, the TrxEB main power switch must be in on position for the EB to be powered up.

7.3 Connect signals

7.3.1 Common signals

Table 12 shows the common signals needed to communicate with transceivers on a mounted EM board. Figure 20 shows where the signals listed Table 12 and Table 13 can be found on the P7 EM I/O breakout header on SmartRF TrxEB.

TrxEB Signal Name	TrxEB breakout pin	Description
RF_RESET_N	P7.10	Signal used to reset EM board
RF_SPI0_SCLK	P7.12	EM SPI interface clock signal
RF_SPI0_CS_N	P7.14	EM SPI interface chip select signal, active low
RF_SPI0_MOSI	P7.16	EM SPI interface MOSI signal
RF_SPI0_MISO	P7.18	EM SPI interface MISO signal
GND	P7.20	Common ground for EB and external MCU board

Table 12 – Strapping overview to connect common signals to an external MCU

7.3.2 Transceiver GPIO signals

The CC1120 GPIO pins available through the EM connectors on the SmartRF TrxEB are listed in Table 13. Figure 20 shows where the signals listed Table 12 and Table 13 can be found on the P7 EM I/O breakout header on SmartRF TrxEB.

NOTE: Transceiver EM boards from Texas Instruments share much of the same GPIO routing to the EM connectors. However, the number of GPIO signals available depends on the transceiver. Please refer to the schematics of your EM board for further details on the available GPIO.

TrxEB Signal Name	TrxEB Breakout Pin	Description
P1_7	P7.8	Transceiver GPIO0
RF_SPI0_MISO	P7.18	Transceiver GPIO1 (Shared with EM SPI MISO)
P1_3	P7.4	Transceiver GPIO2
P1_2 / RF_SPI1_SCLK	P7.3	Transceiver GPIO3

Table 13 – Strapping overview to transceiver GPIO to an external MCU

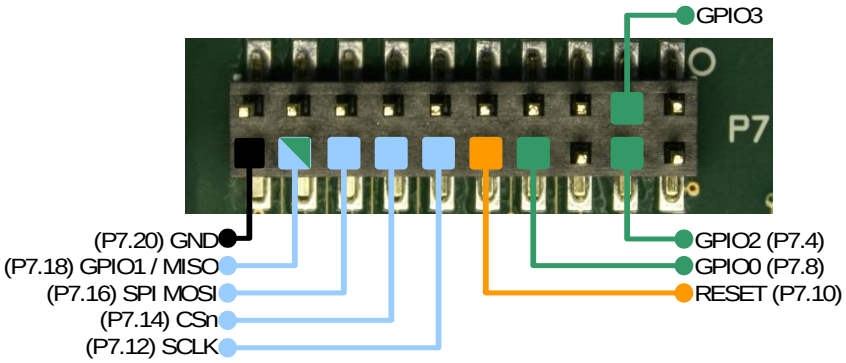

Figure 20 – P7 with strapping to connect external MCU to SmartRF TrxEB

8 Using SmartRF Studio with combo EMs and SmartRF TrxEB

SmartRF Studio does not support controlling combo evaluation modules (e.g. CC1120/CC1190) mounted on SmartRF TrxEB revisions 1.3.0 and 1.5.0 out of the box. The USB MCU on these EB revisions does not have access to sufficient signals for SmartRF Studio to control such EM boards.

In order to use these EB revisions with a combo EM and SmartRF Studio, three signals must be strapped manually. The signals that must be strapped are listed in Table 14 and the strapping is illustrated in Figure 21. Always remember to power off the SmartRF TrxEB before strapping signals.

After strapping these three signals, combo EMs can be used together with SmartRF Studio and SmartRF TrxEB!

NOTE: Additional configuration may be required on the combo EM board. Please refer to the schematics of your combo EM for more details.

EM board signal	Strapping (MSP430 I/O breakout)	
HGM (High Gain Mode)	P3.5	P5.6
PA_EN (Power Amplifier Enable)	P3.4	P2.7
LNA_EN (Low Noise Amplifier Enable)	P1.4	P5.7

Table 14 – Signal strapping for SmartRF Studio combo EM support on SmartRF TrxEB

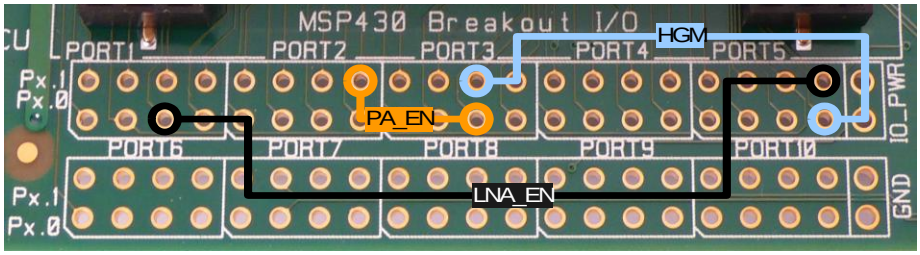

Figure 21 – Signal strapping for SmartRF Studio combo EM support on SmartRF TrxEB

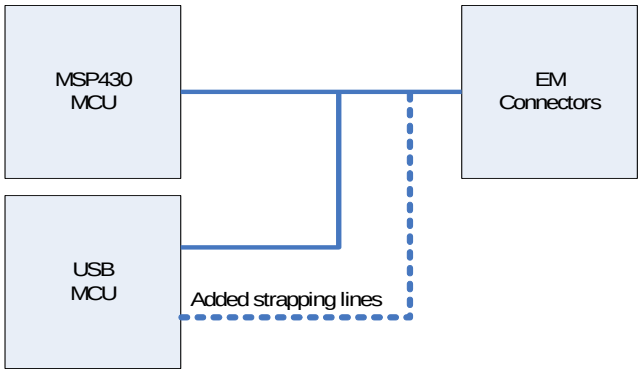

Figure 22 – Block diagram for SmartRF Studio combo EM support on SmartRF TrxEB

9 SmartRF TrxEB rev. 1.3.0

9.1 Board Overview

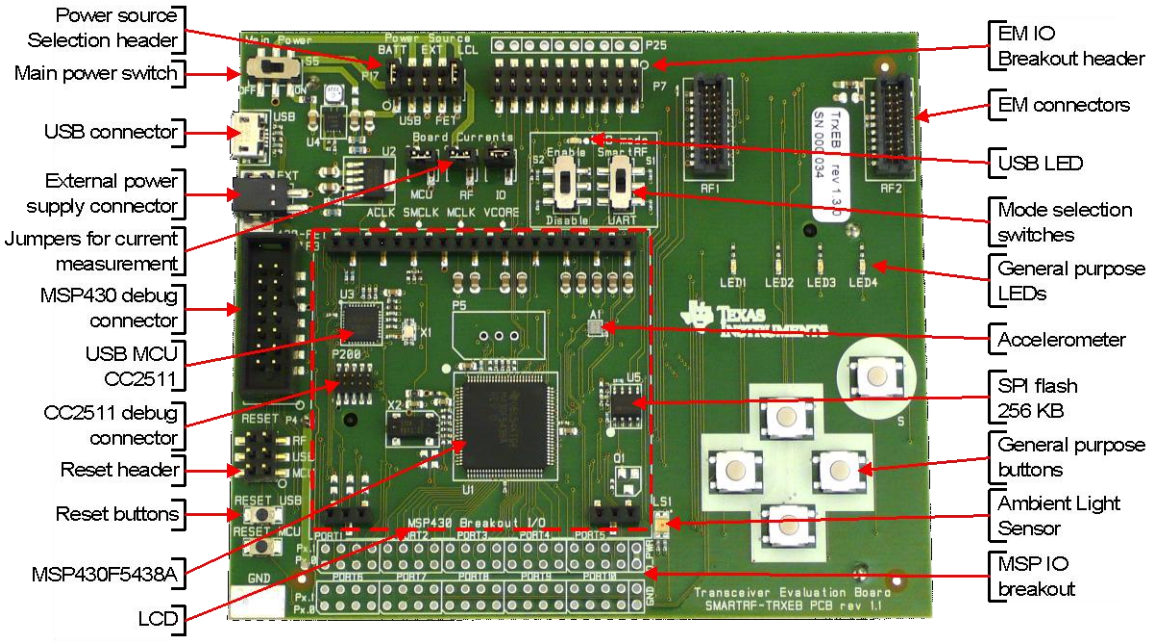

Figure 23 – SmartRF TrxEB revision 1.3.0 overview

9.2 Software Considerations

9.2.1 Virtual COM port over USB

The onboard MSP430 MCU can communicate with a PC over a virtual serial port when the USB MCU is in UART Mode (described in section 6.1.2). When developing MSP430 code to communicate via the USB MCU, keep in mind that the standard USB MCU firmware only supports a two-line UART interface (see section 6.1.2 for further details).

9.2.2 Accelerometer

The onboard MSP430 MCU has access to accelerometer A1. On SmartRF TrxEB revision 1.3.0, the accelerometer axes are as shown in Figure 24.

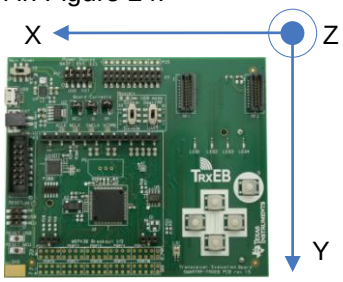

Figure 24 – Accelerometer axes on SmartRF TrxEB rev. 1.3.0

9.3 USB MCU pin-out

Table 15 shows how the USB MCU's pins are connected to the different functionalities on EB revision 1.3.0.

CC2511	Signal name	Description	EM pin
P0.0	MCU_RESET_N	Signal used to reset MSP430 MCU	
P0.1	RF_RESET_N	Signal used to reset EM board	RF2.15
P0.2	RF_SPI0_CS_N	EM SPI Chip Select	RF1.14
P0.3	RF_SPI0_SCLK	EM SPI Clock	RF1.16
P0.4	RF_SPI0_MOSI	EM SPI MOSI	RF1.18
P0.5	RF_SPI0_MISO	EM SPI MISO	RF1.20
P1.0	USB_PULLUP	Enable USB Interface pull-up resistor	
P1.1	P1_3	CC Debug Clock	RF1.12
P1.2	USB_UART_RTS	MSP430 UART (CC2511 CTS)	
P1.3	USB_UART_CTS	MSP430 UART (CC2511 RTS)	
P1.4	USB_UART_TXD	MSP430 UART (CC2511 RXD)	
P1.5	USB_UART_RXD	MSP430 UART (CC2511 TXD)	
P1.6	USB_ENABLE	Switch S2 input	
P1.7	P1_7	CC Debug Data	RF1.10
P2.0	RF_UART_RXD / RF_SPI1_MOSI	GPIO signal to EM board	RF1.9
P2.1	USB_DBG_DD	CC2511 CC Debug Interface Data	
P2.2	USB_DBG_DC	CC2511 CC Debug Interface Clock	
P2.3	USB_MODE	Switch S1 input	
P2.4	USB_LED	USB LED and Forced Recovery signal	

Table 15 – USB MCU pin-out on SmartRF TrxEB rev. 1.3.0

9.4 MSP430 MCU pin-out

For details on the pin-out for MSP430 port 1-10, please refer to Table 9 and Table 10 in section 6.11.2. Table 16 below shows the MSP430 pin-out not listed in section 6.11.2.

MSP430	Signal Name	Description
P11.0	ACLK	MSP430 ACLK output to test point TP5
P11.1	MCLK	MSP430 MCLK output to test point TP6
P11.2	SMCLK	MSP430 SMCLK output to test point TP7
VCORE	VCORE	MSP430 VCORE output to test point TP8
PJ.0	TDO	JTAG Test Data Out
PJ.1	TDI	JTAG Test Data In
PJ.2	TMS	JTAG Test Mode Select
PJ.3	TCK	JTAG Test Clock

Table 16 – MSP430 miscellaneous signal pin-out

10 SmartRF TrxEB rev. 1.5.0

10.1 Board Overview

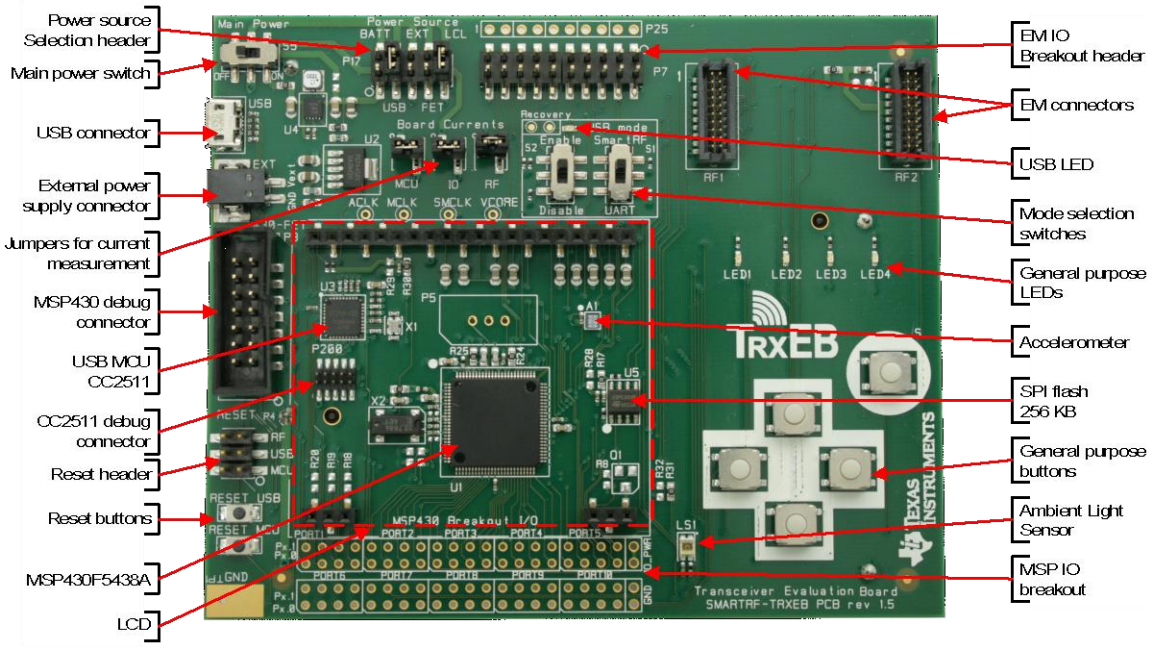

Figure 25 – SmartRF TrxEB revision 1.5.0 overview

10.2 Changes from rev. 1.3.0

10.2.1 RC filter on USB MCU reset line

The pull-up resistor R22 on the USB MCU's reset line (USB_RESET_N) has been removed. It is replaced by a RC filter (R22 and C50) to remove ripple during reset line state transitions. See the schematics for EB revision 1.5.0 for more details.

10.2.2 Accelerometer

The onboard accelerometer (A1) has been rotated 180 degrees compared to EB revision 1.3.0. The accelerometer axes are given in Figure 26. Silk print has been added on the EB backside indicating the accelerometer axes.

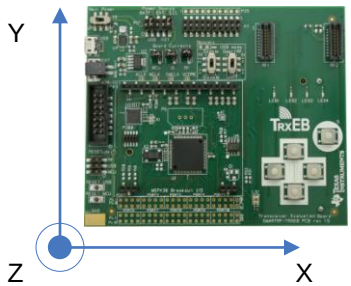

Figure 26 – Accelerometer axes on SmartRF TrxEB rev. 1.5.0

10.2.3 Silk print

Silk print text “IO” and “RF” near board current measurement jumpers P10 and P15 were on EB revision 1.3.0 placed next to the wrong jumper. This has been corrected as seen in Figure 27.

Silk print text “MCLK” and “SMCLK” near test points TP6 and TP7 were on EB revision 1.3.0 swapped, and placed next to the wrong test point. This has been corrected as seen in Figure 27.

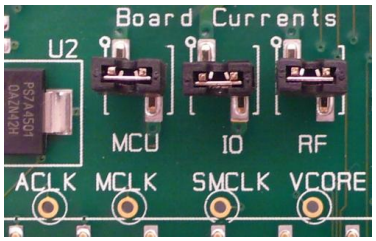

Figure 27 – Correct silk print for MCLK and SMCLK test points

Silk print has been added to the backside for EB revision 1.5.0. The silk print indicates the orientation of the accelerometer axes (see section 10.2.1) and power source jumper configurations (see section 6.3).

10.3 USB MCU pin-out

Same as revision 1.3.0, see section 9.3.

10.4 MSP430 MCU pin-out

Same as revision 1.3.0, see section 9.4.

11 Updating the firmware

Updating the EB firmware is done automatically by SmartRF Studio and SmartRF Flash Programmer if an old or incompatible firmware version is found on the USB MCU. SmartRF Flash Programmer also allows manual programming of the EB firmware. Please refer to the respective user's guides for detailed instructions. A simple step-by-step guide for updating the USB MCU firmware using SmartRF Studio is provided below.

1. Turn off the evaluation board (EB).
2. Disconnect any connected evaluation module (EM).
3. Plug in the USB cable and turn the power switch on.
4. The SmartRF TrxEB device should appear in the SmartRF Studio main window as seen in Figure 28a.
5. Double click the TrxEB device. SmartRF Studio will prompt if you wish to update the EB firmware (Figure 28b).
6. Confirm that you wish to update the EB firmware and wait for the upgrade process to complete (Figure 28c). This may take several seconds.
7. The EB will re-appear as a connected device in the SmartRF Studio window when the update is completed.

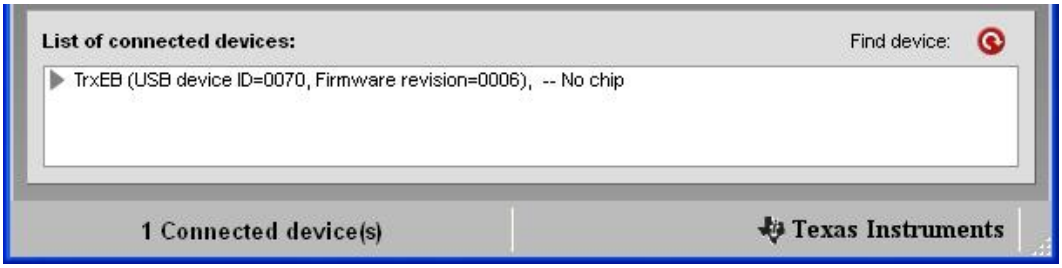

a)

b)

c)

Figure 28 – Firmware upgrade steps in SmartRF Studio

11.1 Forced Boot Recovery Mode

If the firmware update fails and the evaluation board appears to be dead, there is a way to force the board to only run the bootloader and stop all further execution. No attempts will be made to start the EB firmware.

1. Turn the EB power off.
2. Rev. 1.3.0: Ground the USB LED test point shown in Figure 29a.
   Rev. 1.5.0: Ground the USB LED test point with the GND test point in Figure 29b.
3. While doing as explained in the second step, turn the EB power on.

When the board is powered up, the bootloader will not attempt to start the firmware and it will remain in control of the board. LED D6 (USB LED) will be blinking with a 1 second interval, indicating that the bootloader is running. You can use the USB LED state as an indicator to whether you have a working bootloader or not.

When the bootloader is running, the only functionality that is offered from SmartRF Studio and SmartRF Flash Programmer is to load a new version of the standard firmware.

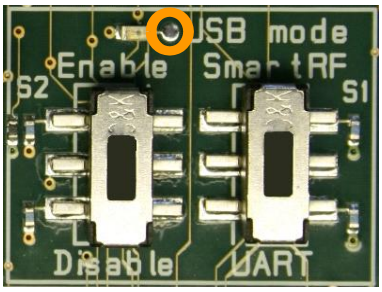

a) Revision 1.3.0

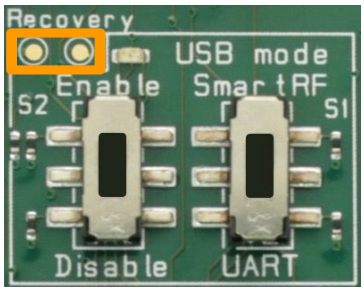

b) Revision 1.5.0

Figure 29 – Enter forced boot recovery mode

12 Frequently Asked Questions

Q1 **I have a SmartRF TrxEB that says revision 1.1 on the PCB, but rev. 1.1 is not mentioned in the User's Guide. Why?**

A1 Your SmartRF TrxEB is indeed what this user's guide call revision 1.3.0. This user's guide refers to the assembly revision of the EB. On SmartRF TrxEB (assembly) revision 1.3.0, the PCB revision is 1.1. For EB revision 1.5.0, the PCB revision is synchronized with the assembly revision, the PCB revision being 1.5.

Q2 **How do I check the firmware revision on the evaluation board?**

A2 You can use both SmartRF Studio and SmartRF Flash Programmer to check the firmware revision. Connect the EB to a PC via USB and launch e.g. the SmartRF Flash Programmer. Select the "EB application (USB)" tab. The SmartRF board should be listed with relevant information about the firmware running on the board. In the below example, the EB firmware revision is 0009.

Q3 **Installation of USB drivers for the evaluation board fails. Help!**

A3 Please refer to design note DN304 [2] on the TI web for help regarding installation of the Cxxxx Development Tools USB driver (Cebal).

Q4 **Nothing happens when I power up the evaluation board. Why?**

A4 Make sure the power selection jumpers on header P17 are set according to your power source (see section 6.3). Check that the Mode Selection switches (section 6.1) are not set to disable the USB MCU. Also, make sure the board current jumpers (P10, P13 and P15) are all short circuited.

Q5 **When powering up the evaluation board, LED D6 starts blinking. Why?**

A5 LED D6 (aka. USB LED) indicates the state of the TrxEB. If the observed behavior is short blinks with long pauses (0.1 s ON, 0.9 s OFF), the EB firmware does not detect any connected chip. If an EM is connected, the firmware does not support the connected EM. Try updating the EB firmware using SmartRF Studio or SmartRF Flash Programmer (see chapter 11).

If the blink frequency is about 1 Hz (0.5 s ON, 0.5 s OFF), the USB MCU bootloader has entered a forced boot recovery mode (set during programming of the device). Power off the system and turn it back on to start the application.

If the blinking is more rapid (10 times per second) the bootloader could not find a valid application in flash. Use SmartRF Studio or SmartRF Flash Programmer to program a new firmware on the board.

See section 6.9.2 for more details on LED D6 states.

13 References

[1] SmartRF Studio Product Page
http://www.ti.com/smartrfstudio

[2] DN404 – CCxxxx Development Tools USB Driver Installation Guide
http://www.ti.com/lit/swra366

[3] CC2511F32 Product Page
http://focus.ti.com/docs/prod/folders/print/cc2511f32.html

[4] SmartRF Flash Programmer Product Page
http://focus.ti.com/docs/toolsw/folders/print/flash-programmer.html

[5] MSP430x5xx/MSP430x6xx Family User's Guide
http://www.ti.com/lit/slau208

[6] MSP430F5438A Product Page
http://focus.ti.com/docs/prod/folders/print/msp430f5438a.html

[7] Electronic Assembly DOGM128-6 Datasheet
http://www.lcd-module.com/eng/pdf/grafik/dogm128e.pdf

[8] VTI CMA3000-D01
http://www.vti.fi/en/products/accelerometers/consumer_electronics/cma3000_series/

[9] Osram SFH 5711
http://www.osram-os.com/

[10] Numonyx M25PE Datasheet
http://www.micron.com/get-document/?documentId=5965

14 Document History

Revision	Date	Description/Changes
SWRU294	2011-06-30	Initial release.

Appendix A

Schematics

SmartRF TrxEB 1.3.0

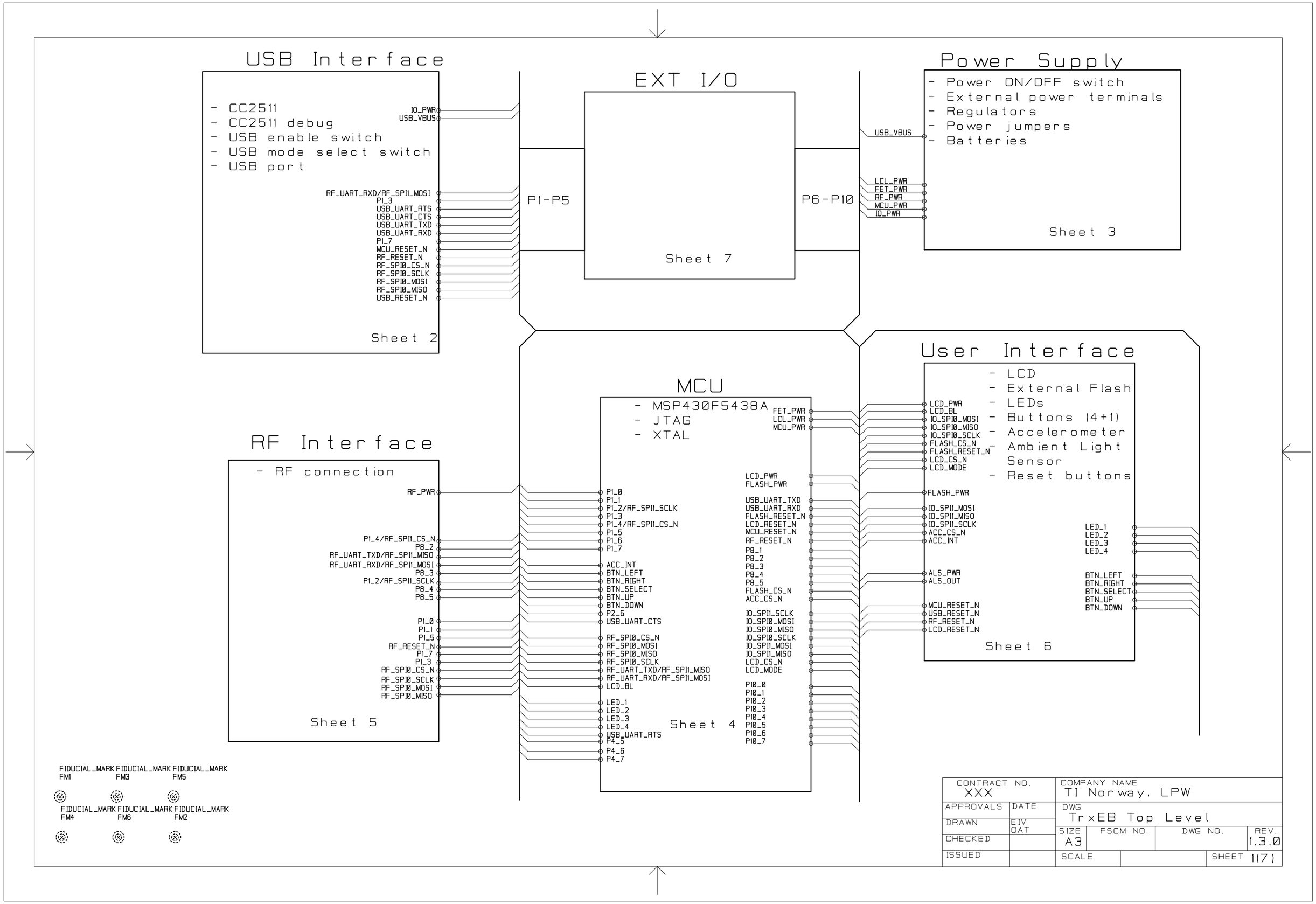
USB Interface
- CC2511
- CC2511 debug
- USB enable switch
- USB mode select switch
- USB port
IO_PWR
USB_VBUS
RF_UART_RXD/RF_SPI1_MOSI
P1_3
USB_UART_RTS
USB_UART_CTS
USB_UART_TXD
USB_UART_RXD
P1_7
MCU_RESET_N
RF_RESET_N
RF_SPI0_CS_N
RF_SPI0_SCLK
RF_SPI0_MOSI
RF_SPI0_MISO
USB_RESET_N
Sheet 2
EXT I/O
P1-P5
P6-P10
Sheet 7
Power Supply
- Power ON/OFF switch
- External power terminals
- Regulators
- Power jumpers
- Batteries
USB_VBUS
LCL_PWR
FET_PWR
RF_PWR
MCU_PWR
IO_PWR
Sheet 3
RF Interface
- RF connection
RF_PWR
P1_4/RF_SPI1_CS_N
P8_2
RF_UART_TXD/RF_SPI1_MISO
RF_UART_RXD/RF_SPI1_MOSI
P8_3
P1_2/RF_SPI1_SCLK
P8_4
P8_5
P1_0
P1_1
P1_5
RF_RESET_N
P1_7
P1_3
RF_SPI0_CS_N
RF_SPI0_SCLK
RF_SPI0_MOSI
RF_SPI0_MISO
Sheet 5
MCU
- MSP430F5438A
- JTAG
- XTAL
FET_PWR
LCL_PWR
MCU_PWR
P1_0
P1_1
P1_2/RF_SPI1_SCLK
P1_3
P1_4/RF_SPI1_CS_N
P1_5
P1_6
P1_7
ACC_INT
BTN_LEFT
BTN_RIGHT
BTN_SELECT
BTN_UP
BTN_DOWN
P2_6
USB_UART_CTS
RF_SPI0_CS_N
RF_SPI0_MOSI
RF_SPI0_MISO
RF_SPI0_SCLK
RF_UART_TXD/RF_SPI1_MISO
RF_UART_RXD/RF_SPI1_MOSI
LCD_BL
LED_1
LED_2
LED_3
LED_4
USB_UART_RTS
P4_5
P4_6
P4_7
LCD_PWR
FLASH_PWR
USB_UART_TXD
USB_UART_RXD
FLASH_RESET_N
LCD_RESET_N
MCU_RESET_N
RF_RESET_N
P8_1
P8_2
P8_3
P8_4
P8_5
FLASH_CS_N
ACC_CS_N
IO_SPI1_SCLK
IO_SPI0_MOSI
IO_SPI0_MISO
IO_SPI0_SCLK
IO_SPI1_MOSI
IO_SPI1_MISO
LCD_CS_N
LCD_MODE
P10_0
P10_1
P10_2
P10_3
P10_4
P10_5
P10_6
P10_7
Sheet 4
User Interface
- LCD
- External Flash
- LEDs
- Buttons (4+1)
- Accelerometer
- Ambient Light Sensor
- Reset buttons
LCD_PWR
LCD_BL
IO_SPI0_MOSI
IO_SPI0_MISO
IO_SPI0_SCLK
FLASH_CS_N
FLASH_RESET_N
LCD_CS_N
LCD_MODE
FLASH_PWR
IO_SPI1_MOSI
IO_SPI1_MISO
IO_SPI1_SCLK
ACC_CS_N
ACC_INT
ALS_PWR
ALS_OUT
MCU_RESET_N
USB_RESET_N
RF_RESET_N
LCD_RESET_N
LED_1
LED_2
LED_3
LED_4
BTN_LEFT
BTN_RIGHT
BTN_SELECT
BTN_UP
BTN_DOWN
Sheet 6
FIDUCIAL_MARK FM1
FIDUCIAL_MARK FM3
FIDUCIAL_MARK FM5
FIDUCIAL_MARK FM4
FIDUCIAL_MARK FM6
FIDUCIAL_MARK FM2
CONTRACT NO. XXX
COMPANY NAME TI Norway, LPW
APPROVALS
DATE
DRAWN EIV OAT
CHECKED
ISSUED
DWG TrxEB Top Level
SIZE A3
FSCM NO.
DWG NO.
REV. 1.3.0
SCALE
SHEET 1(7)

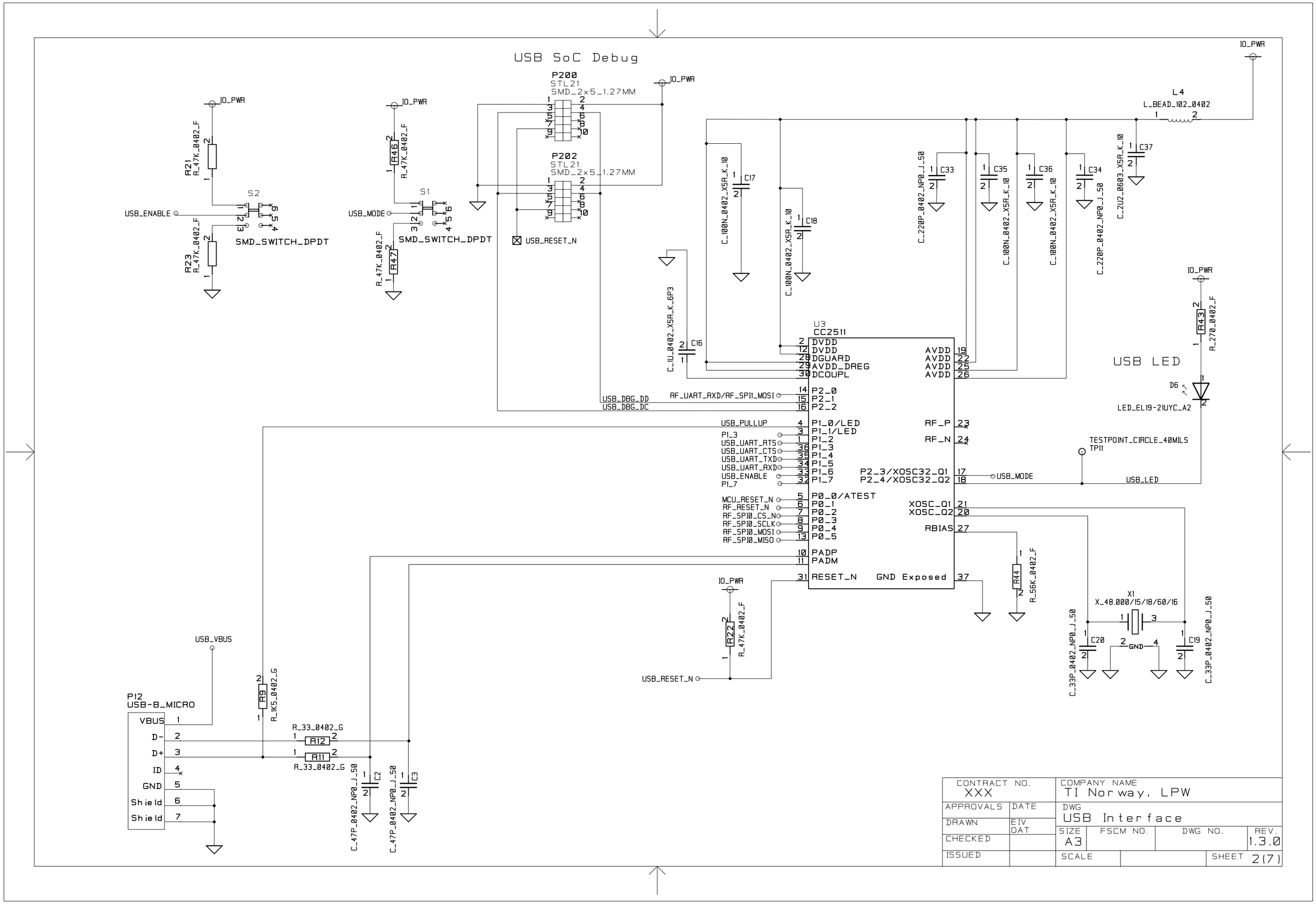
USB SoC Debug
IO_PWR
R21
R_47K_0402_F
R23
R_47K_0402_F
S2
SMD_SWITCH_DPDT
USB_ENABLE
R46
R_47K_0402_F
R47
R_47K_0402_F
S1
SMD_SWITCH_DPDT
USB_MODE
P200
STL21
SMD_2x5_1.27MM
P202
STL21
SMD_2x5_1.27MM
USB_RESET_N
L4
L_BEAD_102_0402
C_2U2_0603_X5R_K_10
C37
C_220P_0402_NP0_J_50
C33
C_100N_0402_X5R_K_10
C35
C36
C34
C_100N_0402_X5R_K_10
C17
C18
C_1U_0402_X5R_K_6P3
C16
U3
CC2511
DVDD
DGUARD
AVDD_DREG
DCOUPL
AVDD
P2_0
P2_1
P2_2
RF_UART_RXD/RF_SPI_MOSI
USB_DBG_DD
USB_DBG_DC
USB_PULLUP
P1_0/LED
P1_1/LED
P1_2
P1_3
P1_4
P1_5
P1_6
P1_7
USB_UART_RTS
USB_UART_CTS
USB_UART_TXD
USB_UART_RXD
USB_ENABLE
MCU_RESET_N
RF_RESET_N
RF_SPI0_CS_N
RF_SPI0_SCLK
RF_SPI0_MOSI
RF_SPI0_MISO
P0_0/ATEST
P0_1
P0_2
P0_3
P0_4
P0_5
PADP
PADM
RESET_N
GND Exposed
RF_P
RF_N
P2_3/XOSC32_Q1
P2_4/XOSC32_Q2
XOSC_Q1
XOSC_Q2
RBIAS
R44
R_56K_0402_F
USB LED
R43
R_270_0402_F
D6
LED_EL19-21UYC_A2
TESTPOINT_CIRCLE_40MILS
TP11
USB_LED
X1
X_48.000/15/18/60/16
C20
C19
C_33P_0402_NP0_J_50
GND
R22
R_47K_0402_F
USB_VBUS
P12
USB-B_MICRO
VBUS
D-
D+
ID
GND
Shield
Shield
R9
R_1K5_0402_G
R12
R_33_0402_G
R11
R_33_0402_G
C2
C_47P_0402_NP0_J_50
C3
C_47P_0402_NP0_J_50
CONTRACT NO.
XXX
COMPANY NAME
TI Norway, LPW
APPROVALS
DATE
DRAWN
EIV OAT
CHECKED
ISSUED
DWG
USB Interface
SIZE
A3
FSCM NO.
DWG NO.
REV.
1.3.0
SCALE
SHEET
2(7)

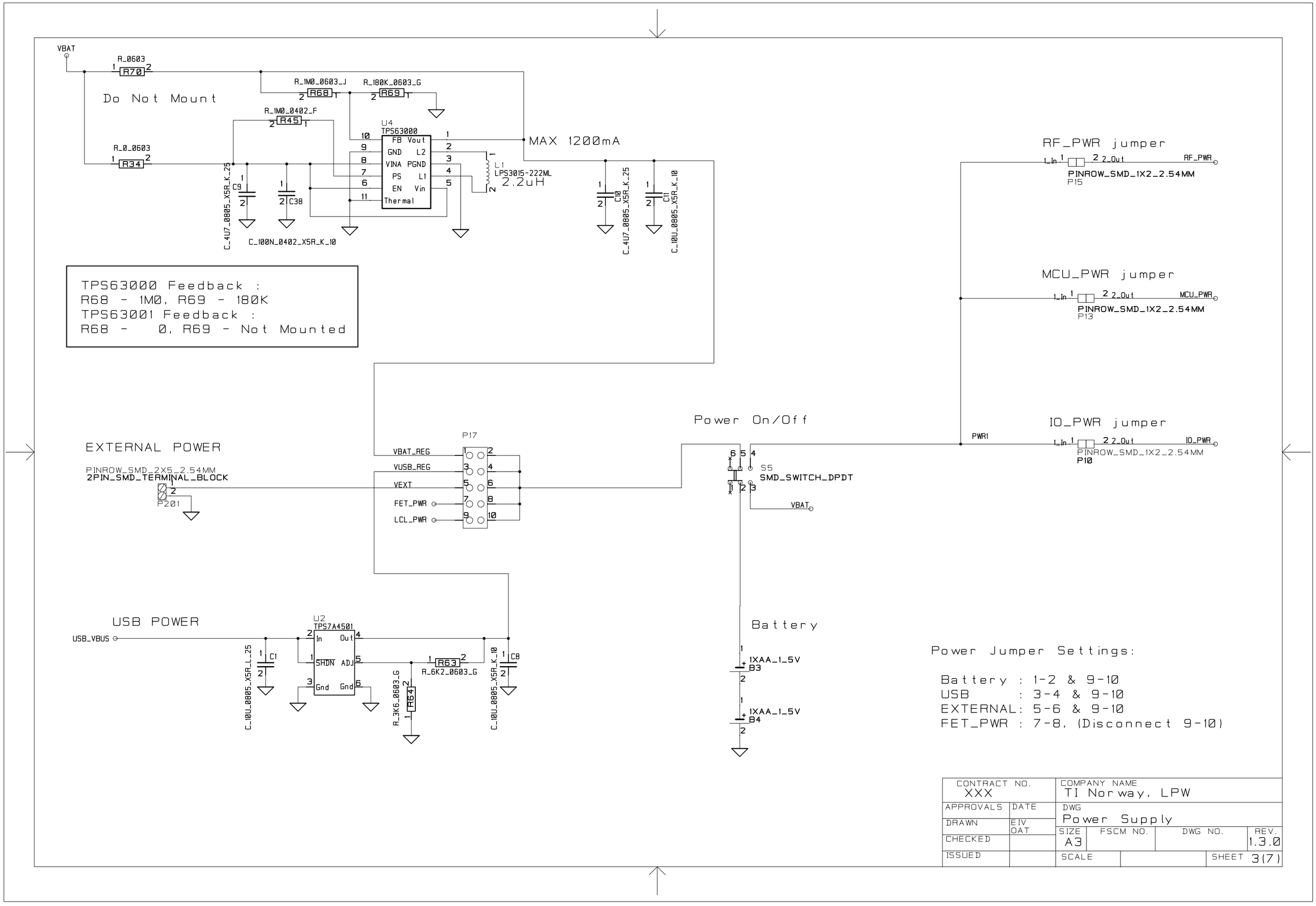
VBAT
R_0603
R70
Do Not Mount
R_1M0_0603_J
R68
R_180K_0603_G
R69
R_1M0_0402_F
R45
R_0_0603
R34
U4
TPS63000
FB Vout
GND L2
VINA PGND
PS L1
EN Vin
Thermal
MAX 1200mA
L1
LPS3015-222ML
2.2uH
C9
C_4U7_0805_X5R_K_25
C38
C_100N_0402_X5R_K_10
C10
C_4U7_0805_X5R_K_25
C11
C_10U_0805_X5R_K_10
TPS63000 Feedback :
R68 - 1M0, R69 - 180K
TPS63001 Feedback :
R68 - 0, R69 - Not Mounted
RF_PWR jumper
RF_PWR
PINROW_SMD_1X2_2.54MM
P15
MCU_PWR jumper
MCU_PWR
PINROW_SMD_1X2_2.54MM
P13
IO_PWR jumper
IO_PWR
PINROW_SMD_1X2_2.54MM
P10
PWR1
Power On/Off
S5
SMD_SWITCH_DPDT
VBAT
EXTERNAL POWER
PINROW_SMD_2X5_2.54MM
2PIN_SMD_TERMINAL_BLOCK
P201
P17
VBAT_REG
VUSB_REG
VEXT
FET_PWR
LCL_PWR
USB POWER
USB_VBUS
U2
TPS7A4501
In Out
SHDN ADJ
Gnd Gnd
C1
C_10U_0805_X5R_L_25
R63
R_6K2_0603_G
R64
R_3K6_0603_G
C8
C_10U_0805_X5R_K_10
Battery
1XAA_1_5V
B3
1XAA_1_5V
B4
Power Jumper Settings:
Battery : 1-2 & 9-10
USB : 3-4 & 9-10
EXTERNAL: 5-6 & 9-10
FET_PWR : 7-8, (Disconnect 9-10)
CONTRACT NO.
XXX
COMPANY NAME
TI Norway, LPW
APPROVALS
DATE
DRAWN
EIV
OAT
CHECKED
ISSUED
DWG
Power Supply
SIZE
A3
FSCM NO.
DWG NO.
REV.
1.3.0
SCALE
SHEET
3(7)

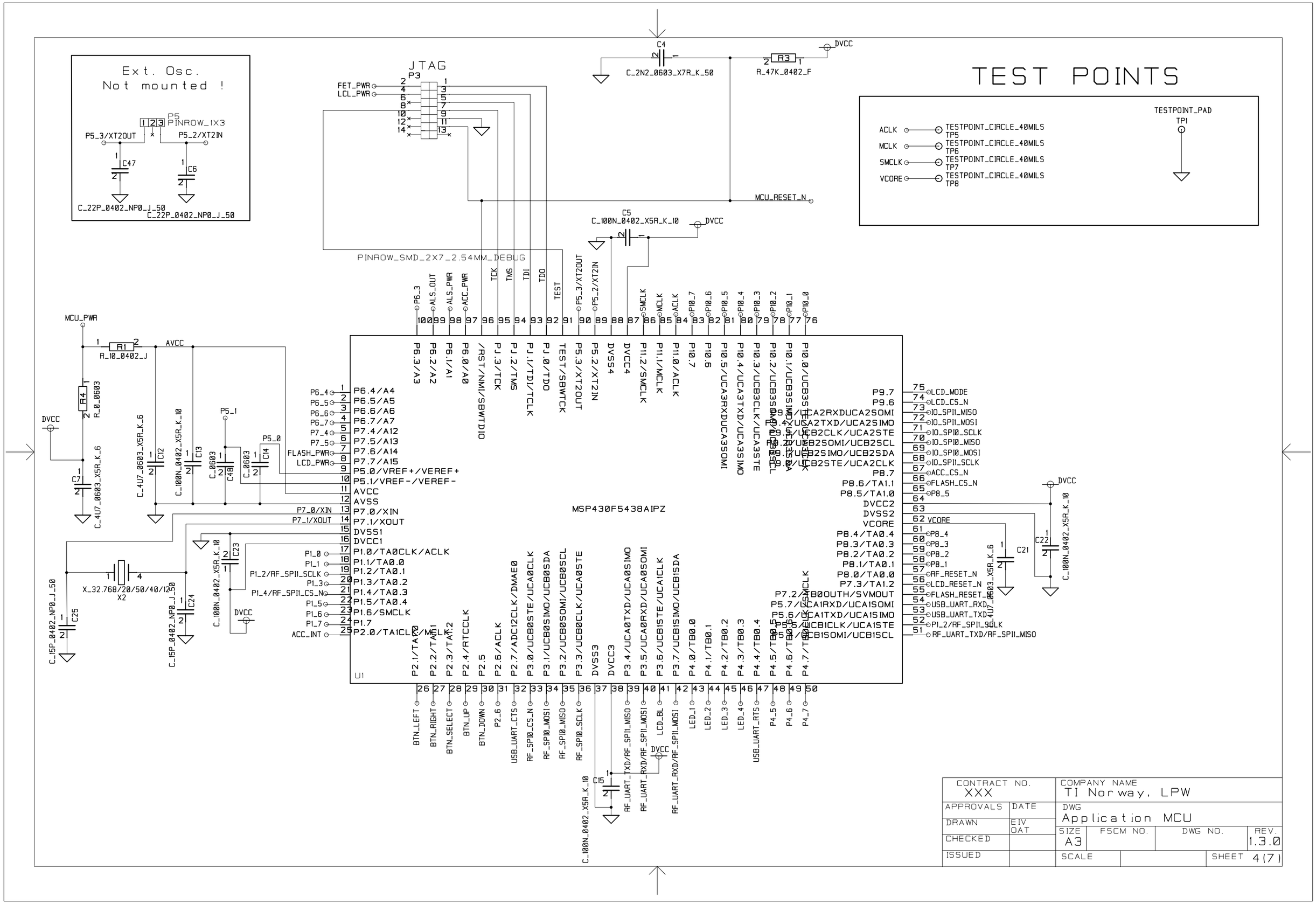
Ext. Osc.
Not mounted !
P5
PINROW_1X3
P5_3/XT2OUT
P5_2/XT2IN
C47
C6
C_22P_0402_NP0_J_50
C_22P_0402_NP0_J_50
JTAG
P3
FET_PWR
LCL_PWR
PINROW_SMD_2X7_2.54MM_DEBUG
C4
C_2N2_0603_X7R_K_50
R3
R_47K_0402_F
DVCC
MCU_RESET_N
C5
C_100N_0402_X5R_K_10
TEST POINTS
ACLK
MCLK
SMCLK
VCORE
TESTPOINT_CIRCLE_40MILS
TP5
TP6
TP7
TP8
TESTPOINT_PAD
TP1
MCU_PWR
R1
R_10_0402_J
AVCC
R4
R_0_0603
C7
C_4U7_0603_X5R_K_6
C12
C_4U7_0603_X5R_K_6
C13
C_100N_0402_X5R_K_10
C48
C_0603
C14
C_0603
P5_1
P5_0
P7_0/XIN
P7_1/XOUT
X_32.768/20/50/40/12.50
X2
C25
C_15P_0402_NP0_J_50
C24
C_15P_0402_NP0_J_50
C23
C_100N_0402_X5R_K_10
P1_2/RF_SPI1_SCLK
P1_4/RF_SPI1_CS_N
ACC_INT
MSP430F5438AIPZ
U1
P6.4/A4
P6.5/A5
P6.6/A6
P6.7/A7
P7.4/A12
P7.5/A13
P7.6/A14
P7.7/A15
P5.0/VREF+/VEREF+
P5.1/VREF-/VEREF-
AVCC
AVSS
P7.0/XIN
P7.1/XOUT
DVSS1
DVCC1
P1.0/TA0CLK/ACLK
P1.1/TA0.0
P1.2/TA0.1
P1.3/TA0.2
P1.4/TA0.3
P1.5/TA0.4
P1.6/SMCLK
P1.7
P2.0/TA1CLK/MCLK
P6.3/A3
P6.2/A2
P6.1/A1
P6.0/A0
/RST/NMI/SBWTDIO
PJ.3/TCK
PJ.2/TMS
PJ.1/TDI/TCLK
PJ.0/TDO
TEST/SBWTCK
P5.3/XT2OUT
P5.2/XT2IN
DVSS4
DVCC4
P11.2/SMCLK
P11.1/MCLK
P11.0/ACLK
P10.7
P10.6
P10.5/UCA3RXDUCA3SOMI
P10.4/UCA3TXD/UCA3SIMO
P10.3/UCB3CLK/UCA3STE
P10.2/UCB3SOMI/UCB3SCL
P10.1/UCB3SIMO/UCB3SDA
P10.0/UCB3STE/UCA3CLK
P9.7
P9.6
P9.5/UCA2RXDUCA2SOMI
P9.4/UCA2TXD/UCA2SIMO
P9.3/UCB2CLK/UCA2STE
P9.2/UCB2SOMI/UCB2SCL
P9.1/UCB2SIMO/UCB2SDA
P9.0/UCB2STE/UCA2CLK
P8.7
P8.6/TA1.1
P8.5/TA1.0
DVCC2
DVSS2
VCORE
P8.4/TA0.4
P8.3/TA0.3
P8.2/TA0.2
P8.1/TA0.1
P8.0/TA0.0
P7.3/TA1.2
P7.2/UB0OUTH/SVMOUT
P5.7/UCA1RXD/UCA1SOMI
P5.6/UCA1TXD/UCA1SIMO
P5.5/UCB1CLK/UCA1STE
P5.4/UCB1SOMI/UCB1SCL
LCD_MODE
LCD_CS_N
IO_SPI1_MISO
IO_SPI1_MOSI
IO_SPI0_SCLK
IO_SPI0_MISO
IO_SPI0_MOSI
IO_SPI1_SCLK
ACC_CS_N
FLASH_CS_N
P8_5
VCORE
P8_4
P8_3
P8_2
P8_1
RF_RESET_N
LCD_RESET_N
FLASH_RESET_N
USB_UART_RXD
USB_UART_TXD
P1_2/RF_SPI1_SCLK
RF_UART_TXD/RF_SPI1_MISO
C21
C_4U7_0603_X5R_K_6
C22
C_100N_0402_X5R_K_10
P2.1/TA1.0
P2.2/TA1.1
P2.3/TA1.2
P2.4/RTCCLK
P2.5
P2.6/ACLK
P2.7/ADC12CLK/DMAE0
P3.0/UCB0STE/UCA0CLK
P3.1/UCB0SIMO/UCB0SDA
P3.2/UCB0SOMI/UCB0SCL
P3.3/UCB0CLK/UCA0STE
DVSS3
DVCC3
P3.4/UCA0TXD/UCA0SIMO
P3.5/UCA0RXD/UCA0SOMI
P3.6/UCB1STE/UCA1CLK
P3.7/UCB1SIMO/UCB1SDA
P4.0/TB0.0
P4.1/TB0.1
P4.2/TB0.2
P4.3/TB0.3
P4.4/TB0.4
P4.5/TB0.5
P4.6/TB0.6
P4.7/TB0.7
BTN_LEFT
BTN_RIGHT
BTN_SELECT
BTN_UP
BTN_DOWN
P2_6
USB_UART_CTS
RF_SPI0_CS_N
RF_SPI0_MOSI
RF_SPI0_MISO
RF_SPI0_SCLK
RF_UART_TXD/RF_SPI1_MISO
RF_UART_RXD/RF_SPI1_MOSI
LCD_BL
RF_UART_RXD/RF_SPI1_MOSI
LED_1
LED_2
LED_3
LED_4
USB_UART_RTS
P4_5
P4_6
P4_7
C15
C_100N_0402_X5R_K_10
CONTRACT NO.
XXX
COMPANY NAME
TI Norway, LPW
APPROVALS
DATE
DRAWN
EIV
OAT
CHECKED
ISSUED
DWG
Application MCU
SIZE
A3
FSCM NO.
DWG NO.
REV.
1.3.0
SCALE
SHEET
4 (7)

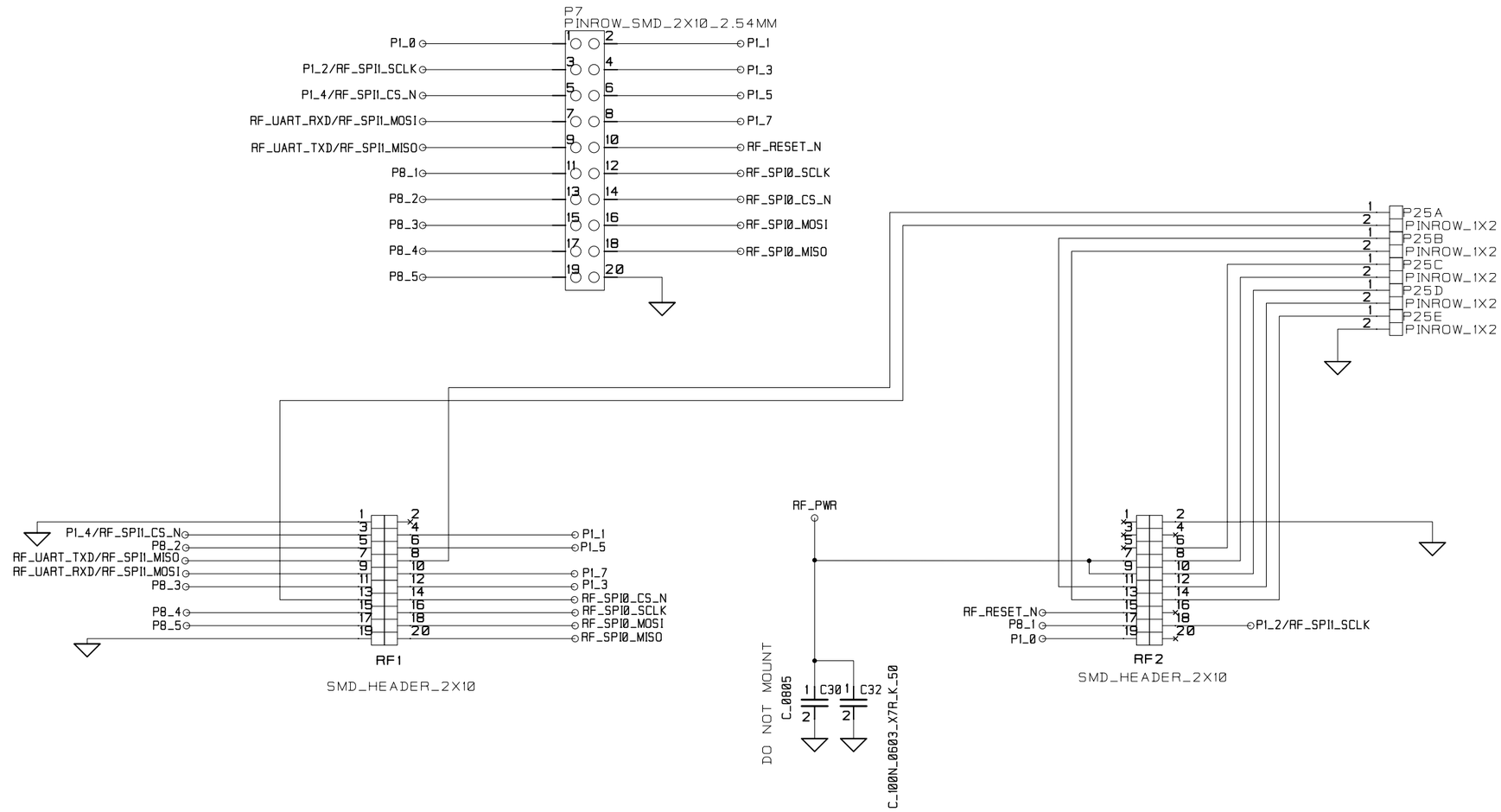

Connectors RF1 and RF2 are SMD,
2x10 pin row headers with 0.05 spacing.
P/N TFM-110-02-SM-D-A-K, produced by Samtec.

The matching connector used on RF
evaluation modules are SFM-110-02-SM-D-A-K.

The distance between RF1 and RF2 is 1200 mils
(center to center).

CONTRACT NO. XXX		COMPANY NAME TI Norway, LPW			
APPROVALS	DATE	DWG EM Interface			
DRAWN	EIV OAT	SIZE A3	FSCM NO.	DWG NO.	REV. 1.3.0
CHECKED					
ISSUED		SCALE			SHEET 5(7)

EXTERNAL FLASH

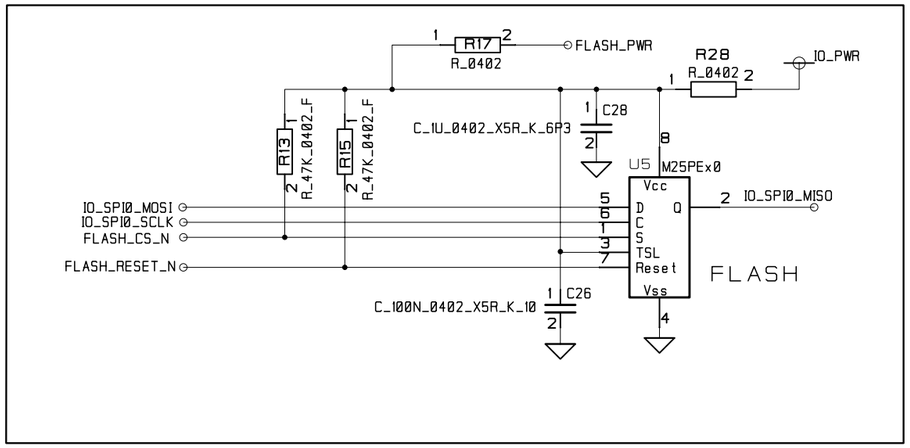

ACCELEROMETER

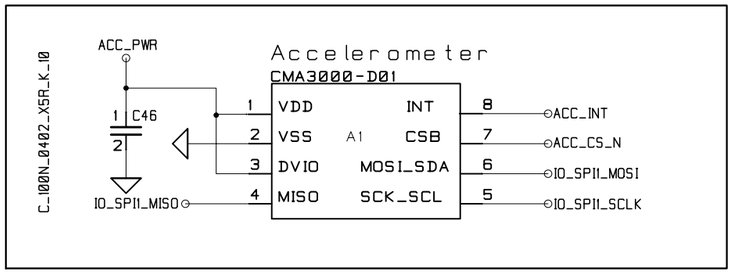

LEDS

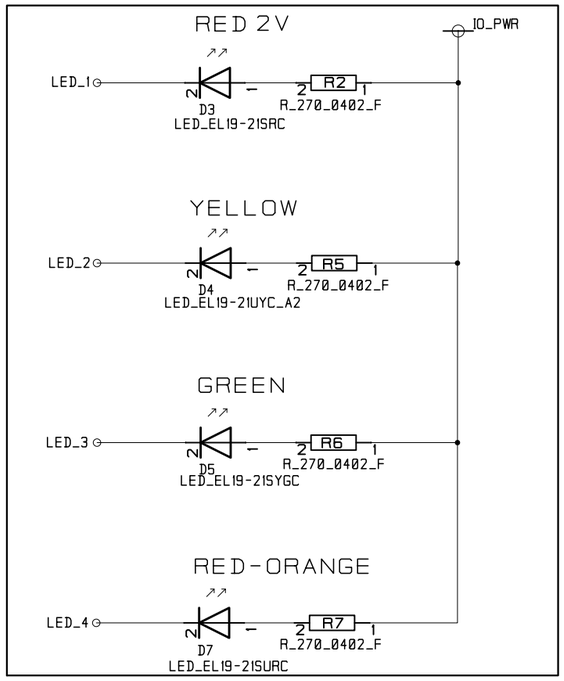

AMBIENT LIGHT SENSOR

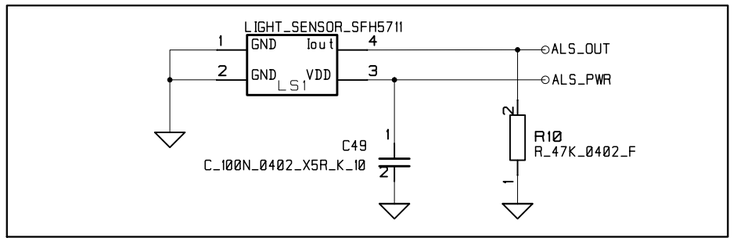

LCD

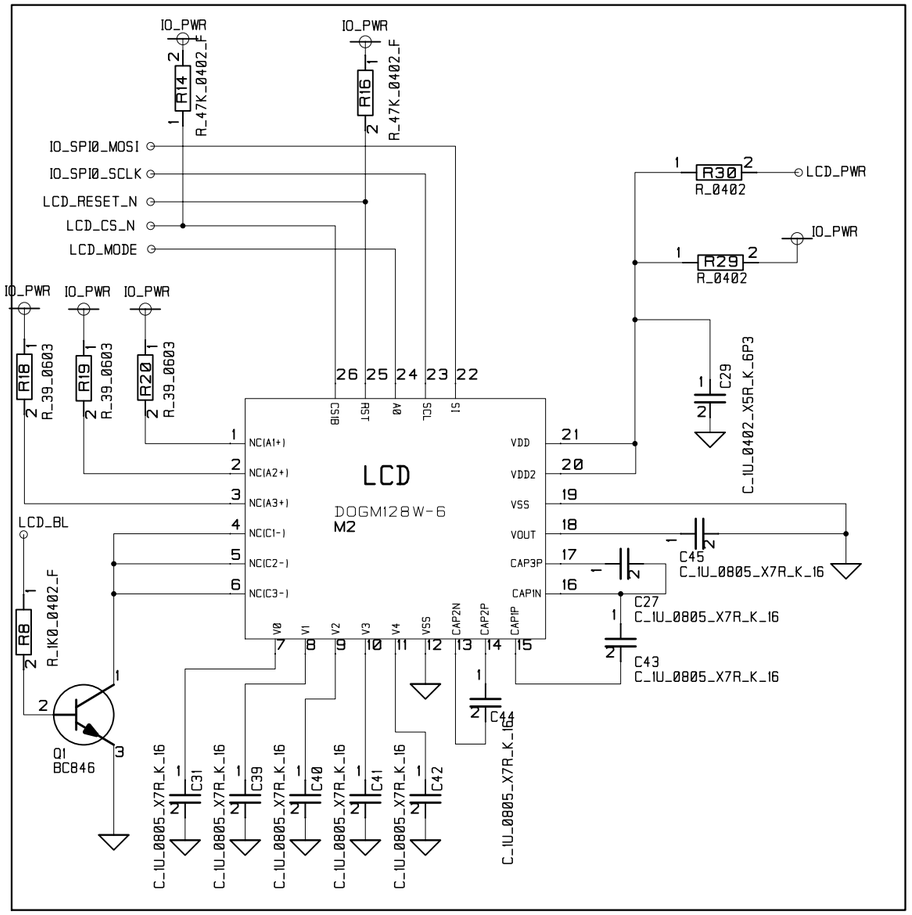

RESET BUTTONS

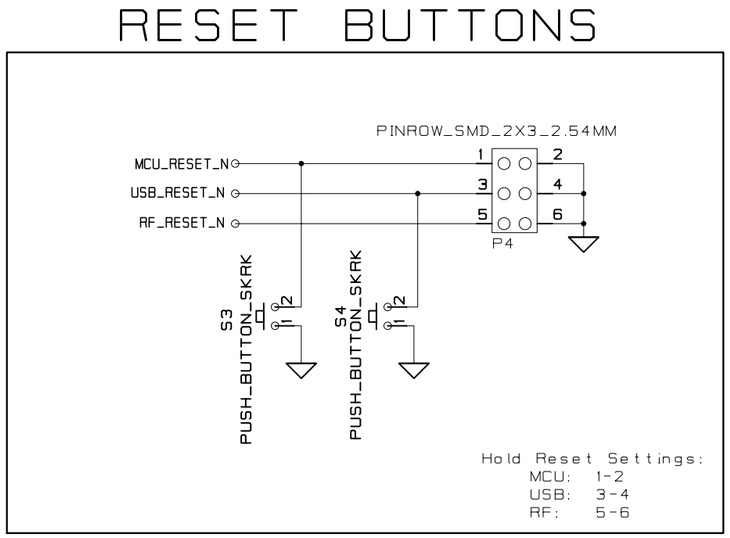

BUTTONS

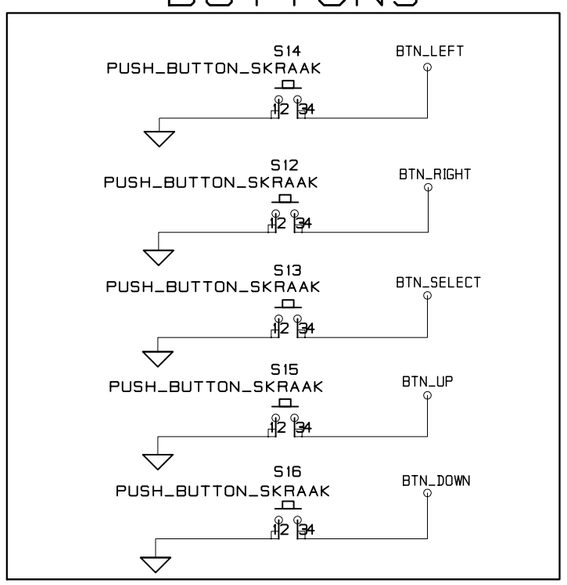

Q1,R8,R18,R19 and R20 Not Mounted when Backlight module (EA LED55x46) is not used, by default there will be no backlight module.

CONTRACT NO. XXX		COMPANY NAME TI Norway, LPW			
APPROVALS	DATE	DWG User Interface			
DRAWN	EIV OAT	SIZE A3	FSCM NO.	DWG NO.	REV. 1.3.0
CHECKED					
ISSUED		SCALE			SHEET 6(7)

EXTERNAL I/O

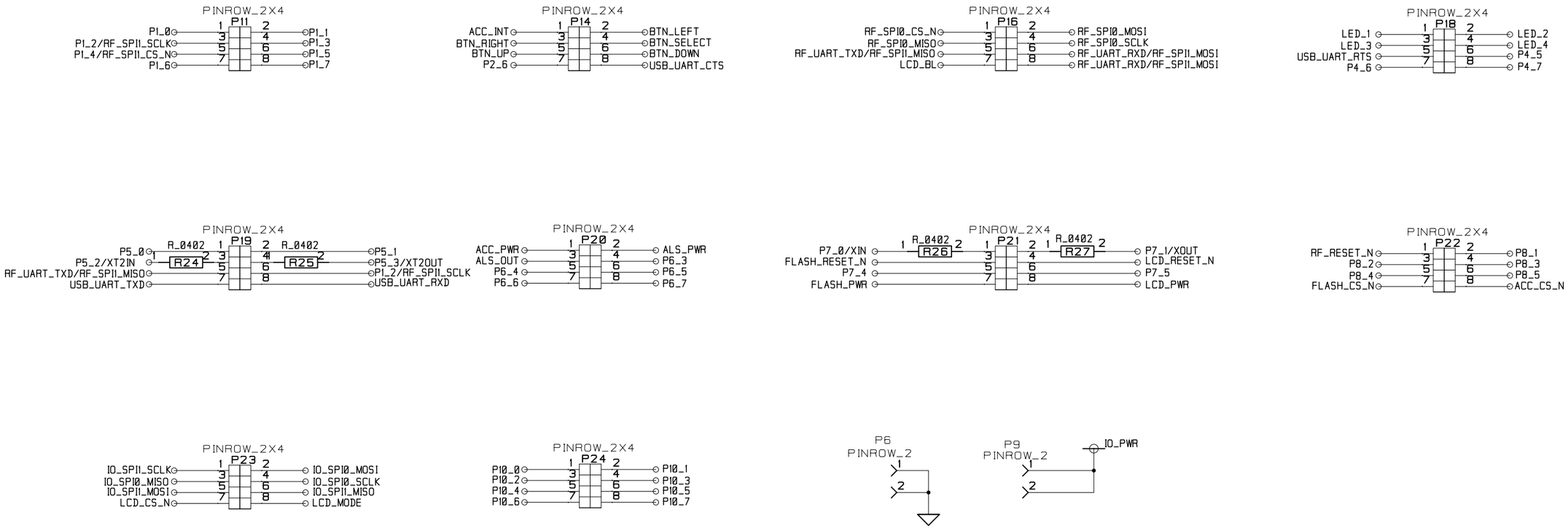

CONTRACT NO. XXX		COMPANY NAME TI Norway, LPW			
APPROVALS	DATE	DWG			
DRAWN	EIV OAT	SIZE A3	FSCM NO.	DWG NO.	REV. 1.3.0
CHECKED					
ISSUED		SCALE			SHEET 7(7)

Appendix B

Schematics

SmartRF TrxEB 1.5.0

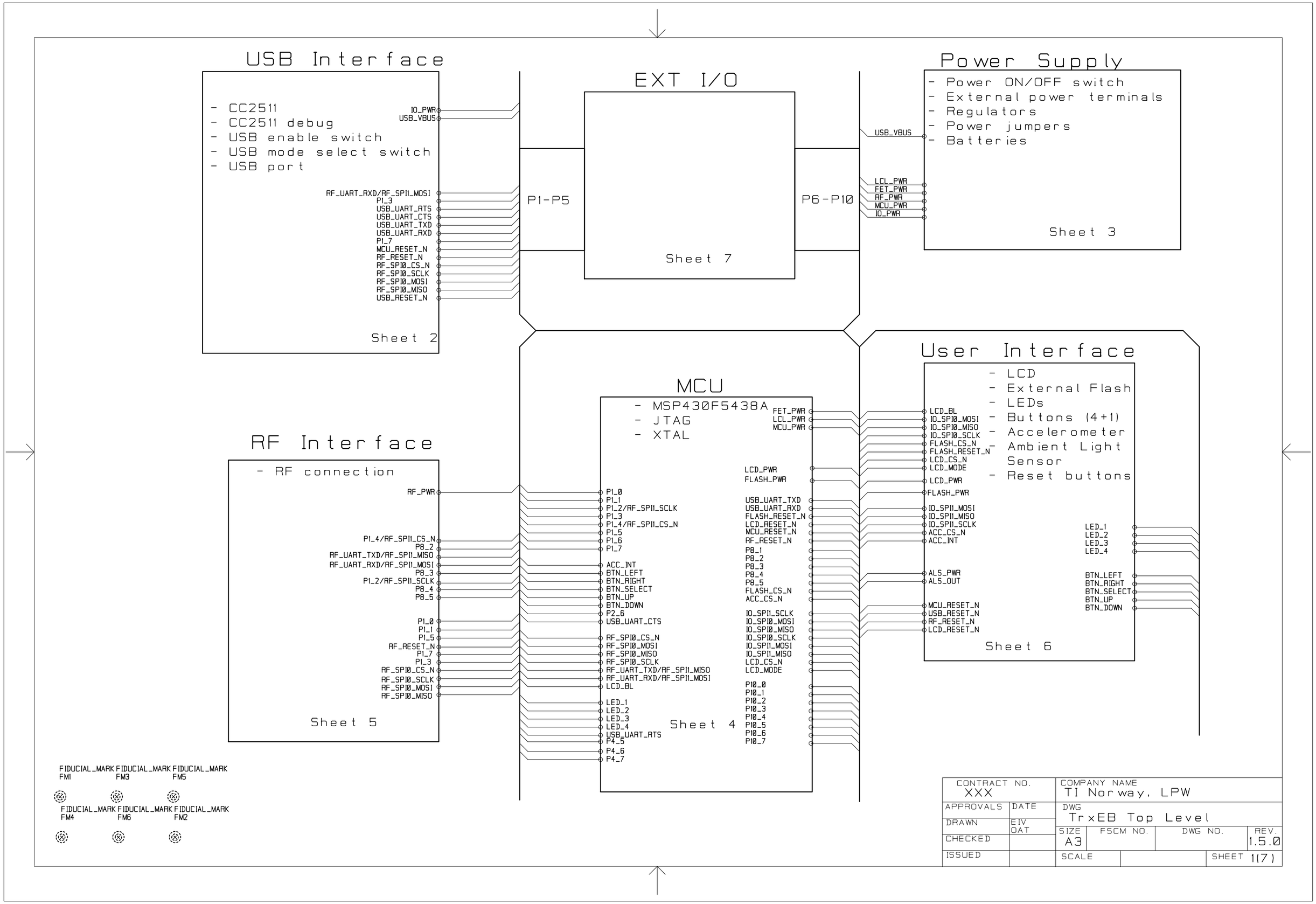
USB Interface
- CC2511
- CC2511 debug
- USB enable switch
- USB mode select switch
- USB port
IO_PWR
USB_VBUS
RF_UART_RXD/RF_SPI1_MOSI
P1_3
USB_UART_RTS
USB_UART_CTS
USB_UART_TXD
USB_UART_RXD
P1_7
MCU_RESET_N
RF_RESET_N
RF_SPI0_CS_N
RF_SPI0_SCLK
RF_SPI0_MOSI
RF_SPI0_MISO
USB_RESET_N
Sheet 2
EXT I/O
P1-P5
P6-P10
Sheet 7
Power Supply
- Power ON/OFF switch
- External power terminals
- Regulators
- Power jumpers
- Batteries
USB_VBUS
LCL_PWR
FET_PWR
RF_PWR
MCU_PWR
IO_PWR
Sheet 3
RF Interface
- RF connection
RF_PWR
P1_4/RF_SPI1_CS_N
P8_2
RF_UART_TXD/RF_SPI1_MISO
RF_UART_RXD/RF_SPI1_MOSI
P8_3
P1_2/RF_SPI1_SCLK
P8_4
P8_5
P1_0
P1_1
P1_5
RF_RESET_N
P1_7
P1_3
RF_SPI0_CS_N
RF_SPI0_SCLK
RF_SPI0_MOSI
RF_SPI0_MISO
Sheet 5
MCU
- MSP430F5438A
- JTAG
- XTAL
FET_PWR
LCL_PWR
MCU_PWR
P1_0
P1_1
P1_2/RF_SPI1_SCLK
P1_3
P1_4/RF_SPI1_CS_N
P1_5
P1_6
P1_7
ACC_INT
BTN_LEFT
BTN_RIGHT
BTN_SELECT
BTN_UP
BTN_DOWN
P2_6
USB_UART_CTS
RF_SPI0_CS_N
RF_SPI0_MOSI
RF_SPI0_MISO
RF_SPI0_SCLK
RF_UART_TXD/RF_SPI1_MISO
RF_UART_RXD/RF_SPI1_MOSI
LCD_BL
LED_1
LED_2
LED_3
LED_4
USB_UART_RTS
P4_5
P4_6
P4_7
LCD_PWR
FLASH_PWR
USB_UART_TXD
USB_UART_RXD
FLASH_RESET_N
LCD_RESET_N
MCU_RESET_N
RF_RESET_N
P8_1
P8_2
P8_3
P8_4
P8_5
FLASH_CS_N
ACC_CS_N
IO_SPI1_SCLK
IO_SPI0_MOSI
IO_SPI0_MISO
IO_SPI0_SCLK
IO_SPI1_MOSI
IO_SPI1_MISO
LCD_CS_N
LCD_MODE
P10_0
P10_1
P10_2
P10_3
P10_4
P10_5
P10_6
P10_7
Sheet 4
User Interface
- LCD
- External Flash
- LEDs
- Buttons (4+1)
- Accelerometer
- Ambient Light Sensor
- Reset buttons
LCD_BL
IO_SPI0_MOSI
IO_SPI0_MISO
IO_SPI0_SCLK
FLASH_CS_N
FLASH_RESET_N
LCD_CS_N
LCD_MODE
LCD_PWR
FLASH_PWR
IO_SPI1_MOSI
IO_SPI1_MISO
IO_SPI1_SCLK
ACC_CS_N
ACC_INT
ALS_PWR
ALS_OUT
MCU_RESET_N
USB_RESET_N
RF_RESET_N
LCD_RESET_N
LED_1
LED_2
LED_3
LED_4
BTN_LEFT
BTN_RIGHT
BTN_SELECT
BTN_UP
BTN_DOWN
Sheet 6
FIDUCIAL_MARK FM1
FIDUCIAL_MARK FM3
FIDUCIAL_MARK FM5
FIDUCIAL_MARK FM4
FIDUCIAL_MARK FM6
FIDUCIAL_MARK FM2
CONTRACT NO. XXX
COMPANY NAME TI Norway, LPW
APPROVALS
DATE
DRAWN EIV OAT
CHECKED
ISSUED
DWG TrxEB Top Level
SIZE A3
FSCM NO.
DWG NO.
REV. 1.5.0
SCALE
SHEET 1(7)

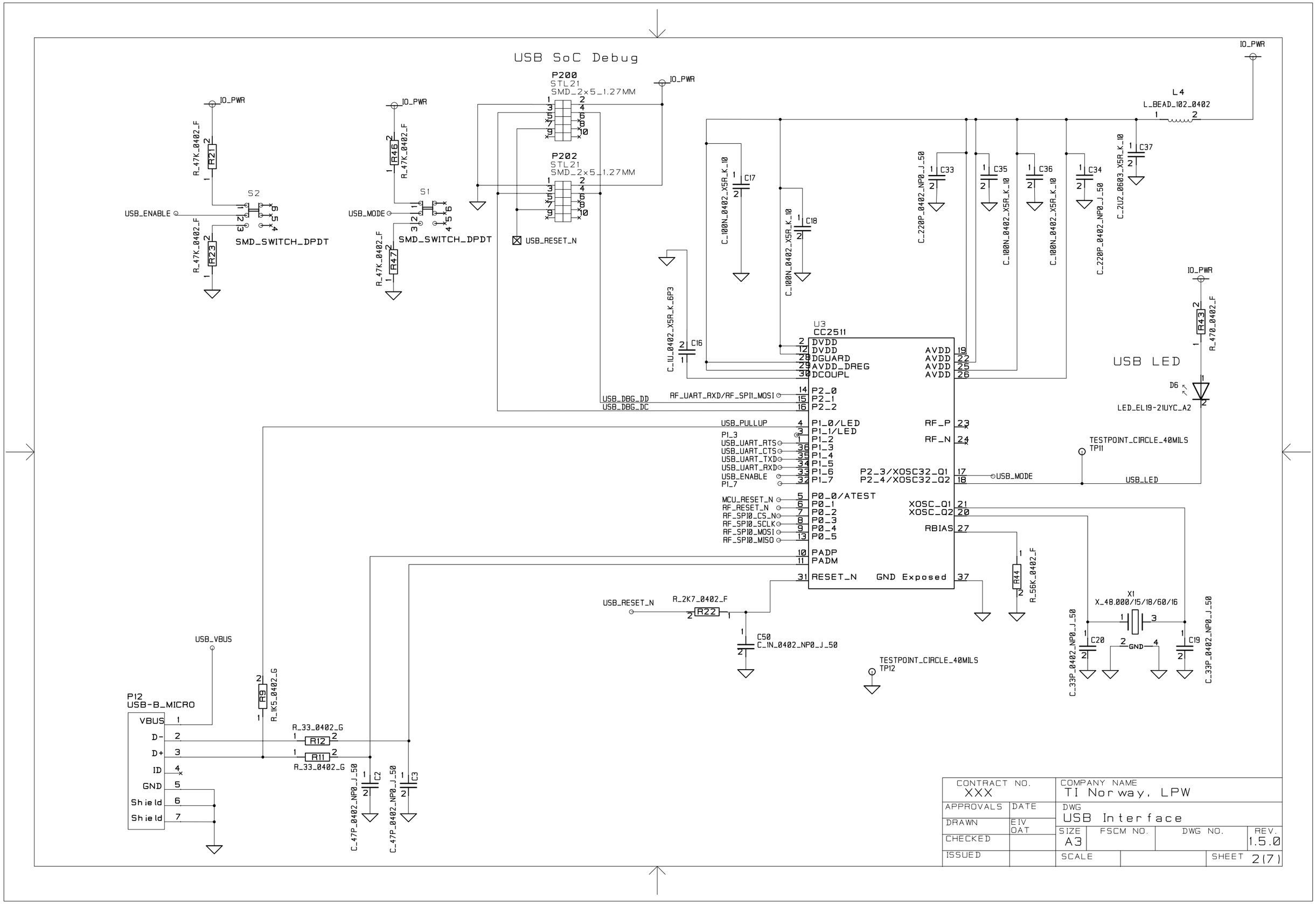
USB SoC Debug
IO_PWR
P200
STL21
SMD_2x5_1.27MM
P202
STL21
SMD_2x5_1.27MM
USB_RESET_N
S2
USB_ENABLE
R21
R_47K_0402_F
R23
R_47K_0402_F
SMD_SWITCH_DPDT
S1
USB_MODE
R46
R_47K_0402_F
R47
R_47K_0402_F
SMD_SWITCH_DPDT
L4
L_BEAD_102_0402
C_2U2_0603_X5R_K_10
C37
C_220P_0402_NP0_J_50
C33
C35
C36
C34
C_100N_0402_X5R_K_10
C_100N_0402_X5R_K_10
C17
C18
C_1U_0402_X5R_K_6P3
C16
U3
CC2511
DVDD
DVDD
DGUARD
AVDD_DREG
DCOUPL
AVDD
AVDD
AVDD
AVDD
P2_0
P2_1
P2_2
USB_DBG_DD
USB_DBG_DC
RF_UART_RXD/RF_SPI_MOSI
USB_PULLUP
P1_3
USB_UART_RTS
USB_UART_CTS
USB_UART_TXD
USB_UART_RXD
USB_ENABLE
P1_7
P1_0/LED
P1_1/LED
P1_2
P1_3
P1_4
P1_5
P1_6
P1_7
MCU_RESET_N
RF_RESET_N
RF_SPI0_CS_N
RF_SPI0_SCLK
RF_SPI0_MOSI
RF_SPI0_MISO
P0_0/ATEST
P0_1
P0_2
P0_3
P0_4
P0_5
PADP
PADM
RESET_N
GND Exposed
RF_P
RF_N
P2_3/XOSC32_Q1
P2_4/XOSC32_Q2
USB_MODE
XOSC_Q1
XOSC_Q2
RBIAS
R44
R_56K_0402_F
USB LED
R43
R_470_0402_F
D6
LED_EL19-21UYC_A2
TESTPOINT_CIRCLE_40MILS
TP11
USB_LED
USB_RESET_N
R_2K7_0402_F
R22
C50
C_1N_0402_NP0_J_50
TESTPOINT_CIRCLE_40MILS
TP12
X1
X_48.000/15/18/60/16
GND
C20
C19
C_33P_0402_NP0_J_50
USB_VBUS
P12
USB-B_MICRO
VBUS
D-
D+
ID
GND
Shield
Shield
R9
R_1K5_0402_G
R_33_0402_G
R12
R11
R_33_0402_G
C2
C3
C_47P_0402_NP0_J_50
C_47P_0402_NP0_J_50
CONTRACT NO.
XXX
COMPANY NAME
TI Norway, LPW
APPROVALS
DATE
DRAWN
EIV
OAT
CHECKED
ISSUED
DWG
USB Interface
SIZE
A3
FSCM NO.
DWG NO.
REV.
1.5.0
SCALE
SHEET
2(7)

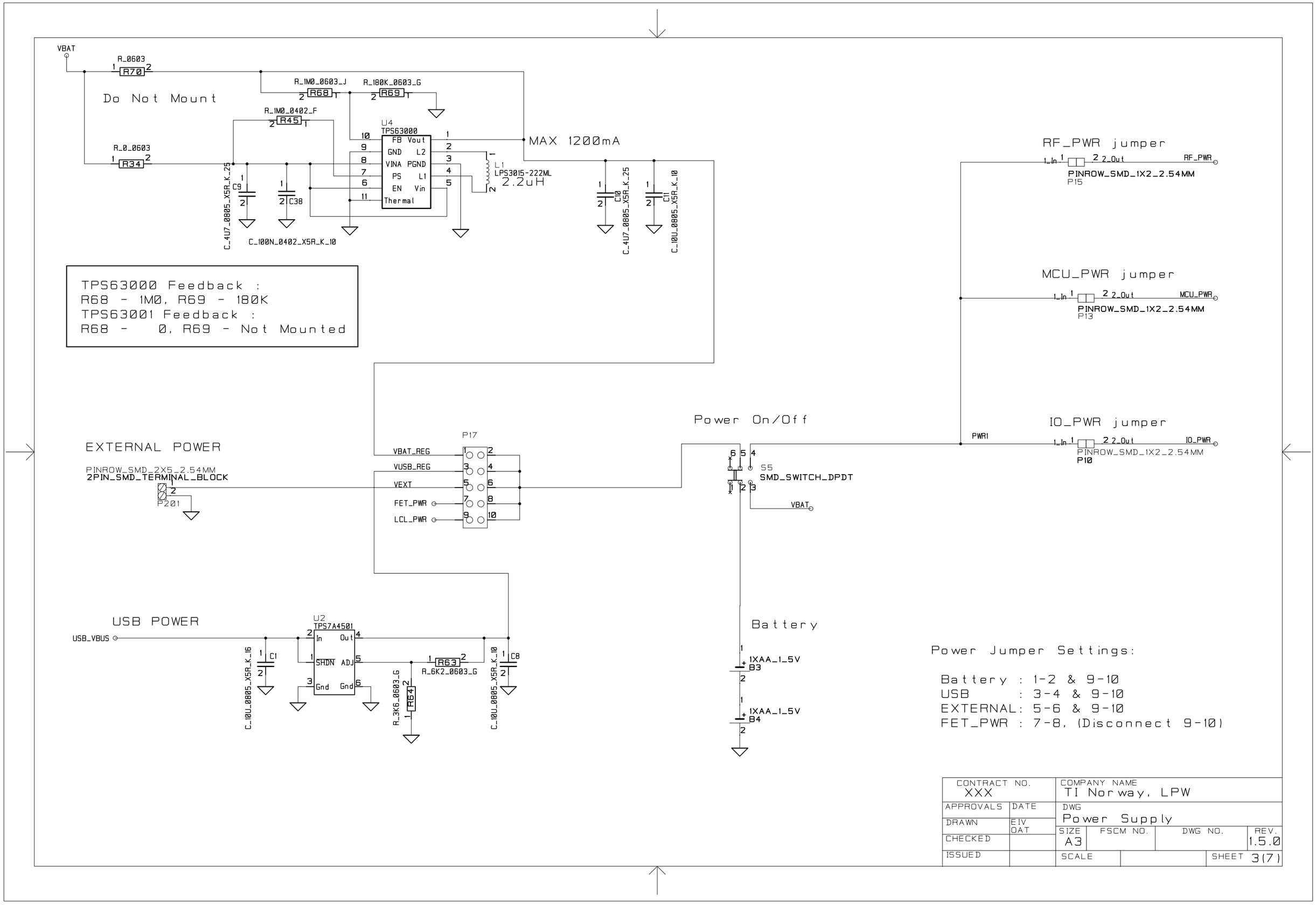
VBAT
R_0603
R70
Do Not Mount
R_1M0_0603_J
R68
R_180K_0603_G
R69
R_1M0_0402_F
R45
R_0_0603
R34
U4
TPS63000
FB Vout
GND L2
VINA PGND
PS L1
EN Vin
Thermal
MAX 1200mA
L1
LPS3015-222ML
2.2uH
C9
C_4U7_0805_X5R_K_25
C38
C_100N_0402_X5R_K_10
C10
C_4U7_0805_X5R_K_25
C11
C_10U_0805_X5R_K_10
TPS63000 Feedback :
R68 - 1M0, R69 - 180K
TPS63001 Feedback :
R68 - 0, R69 - Not Mounted
RF_PWR jumper
PINROW_SMD_1X2_2.54MM
P15
RF_PWR
MCU_PWR jumper
PINROW_SMD_1X2_2.54MM
P13
MCU_PWR
IO_PWR jumper
PINROW_SMD_1X2_2.54MM
P10
IO_PWR
PWR1
Power On/Off
S5
SMD_SWITCH_DPDT
VBAT
EXTERNAL POWER
PINROW_SMD_2X5_2.54MM
2PIN_SMD_TERMINAL_BLOCK
P201
P17
VBAT_REG
VUSB_REG
VEXT
FET_PWR
LCL_PWR
USB POWER
USB_VBUS
U2
TPS7A4501
In Out
SHDN ADJ
Gnd Gnd
C1
C_10U_0805_X5R_K_16
R63
R_6K2_0603_G
R64
R_3K6_0603_G
C8
C_10U_0805_X5R_K_10
Battery
1XAA_1_5V
B3
1XAA_1_5V
B4
Power Jumper Settings:
Battery : 1-2 & 9-10
USB : 3-4 & 9-10
EXTERNAL: 5-6 & 9-10
FET_PWR : 7-8, (Disconnect 9-10)
CONTRACT NO.
XXX
COMPANY NAME
TI Norway, LPW
APPROVALS
DATE
DRAWN
EIV
OAT
CHECKED
ISSUED
DWG
Power Supply
SIZE
A3
FSCM NO.
DWG NO.
REV.
1.5.0
SCALE
SHEET
3(7)

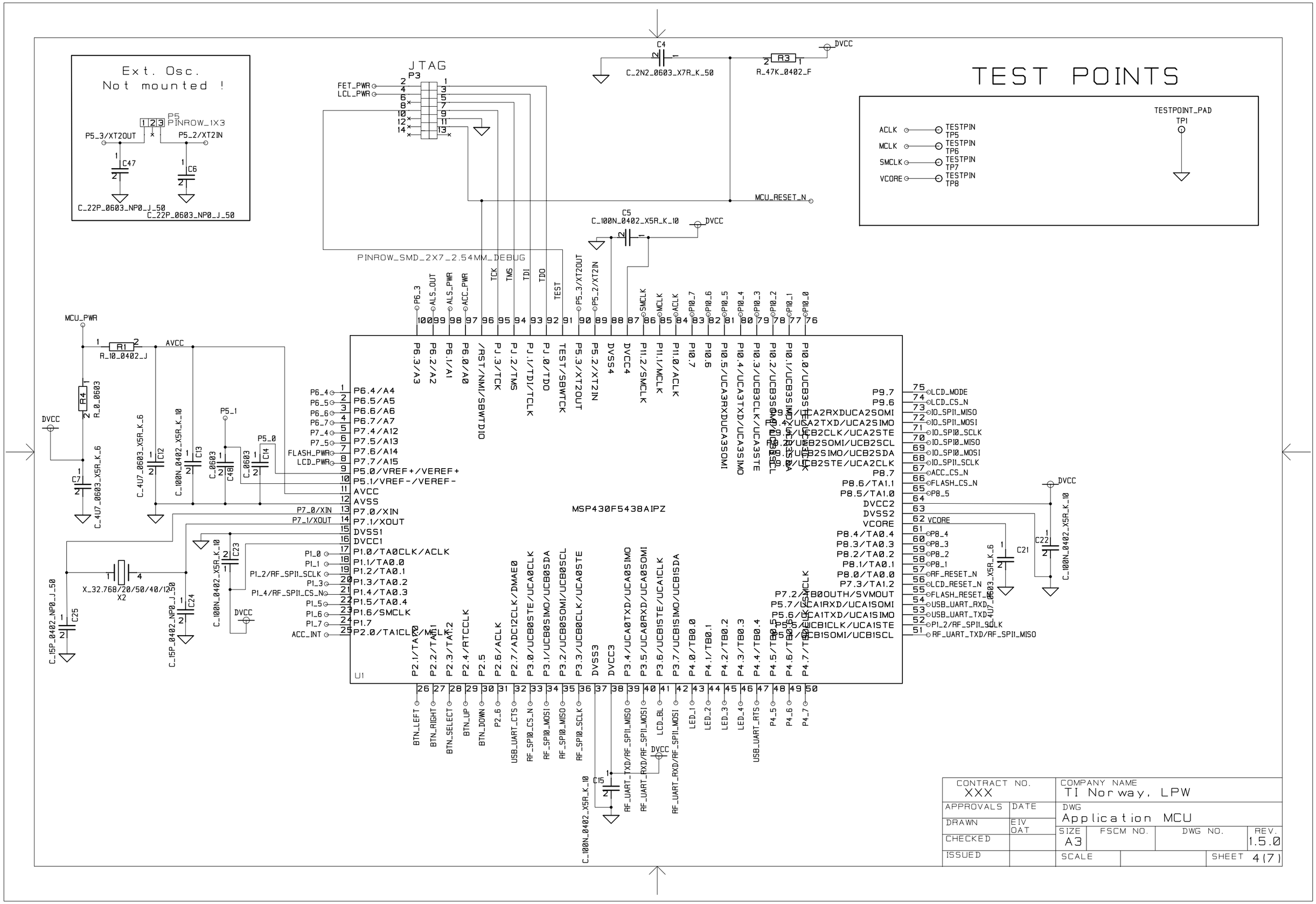

CONTRACT NO. XXX		COMPANY NAME TI Norway, LPW	
APPROVALS	DATE	DWG Application MCU	
DRAWN	EIV OAT	SIZE A3 / FSCM NO. / DWG NO.	REV. 1.5.0
CHECKED			
ISSUED		SCALE	SHEET 4 (7)

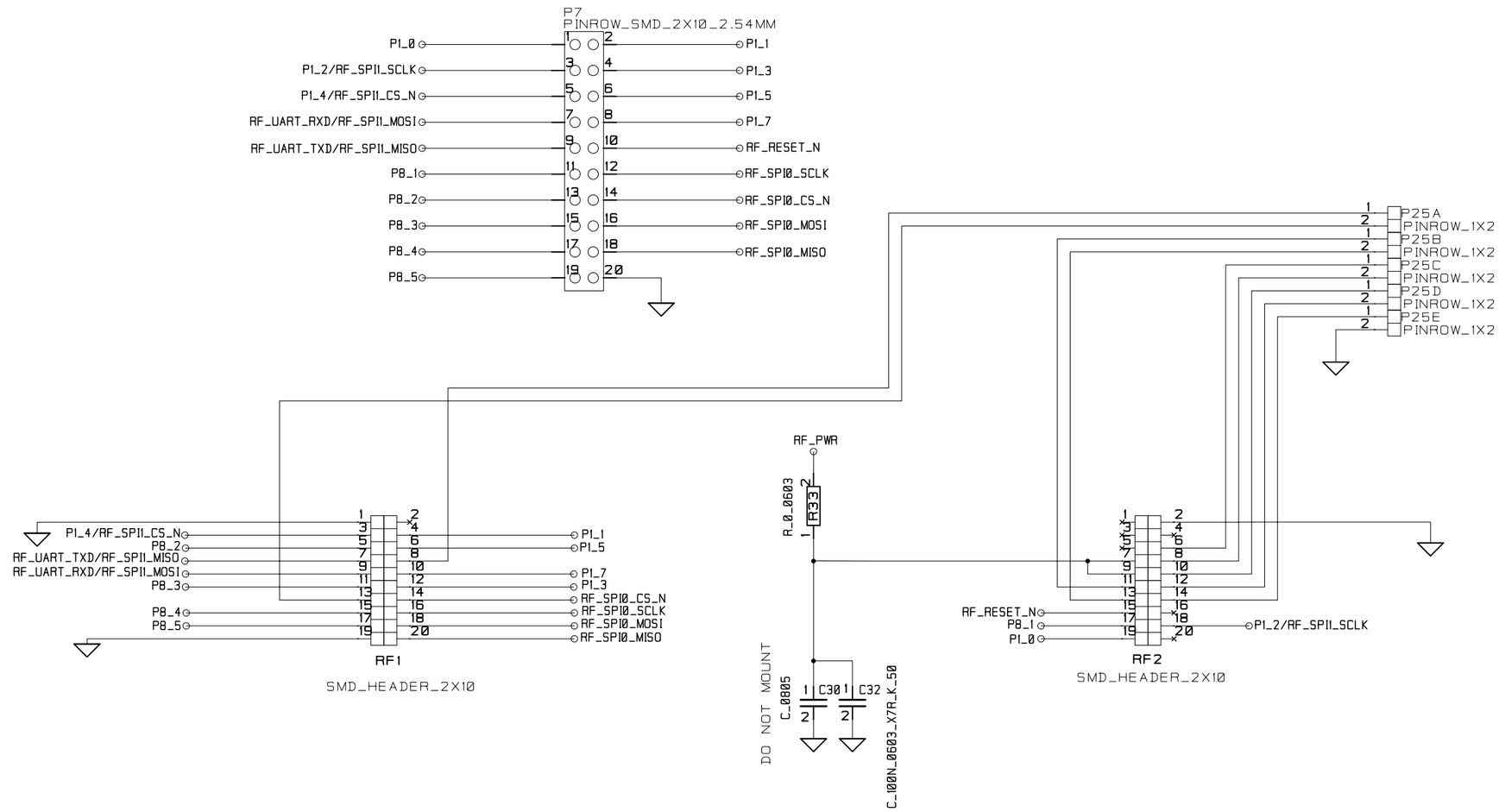

Connectors RF1 and RF2 are SMD,
2x10 pin row headers with 0.05 spacing.
P/N TFM-110-02-SM-D-A-K, produced by Samtec.

The matching connector used on RF
evaluation modules are SFM-110-02-SM-D-A-K.

The distance between RF1 and RF2 is 1200 mils
(center to center).

CONTRACT NO. XXX		COMPANY NAME TI Norway, LPW			
APPROVALS	DATE	DWG EM Interface			
DRAWN	EIV OAT	SIZE A3	FSCM NO.	DWG NO.	REV. 1.5.0
CHECKED					
ISSUED		SCALE			SHEET 5(7)

EXTERNAL FLASH

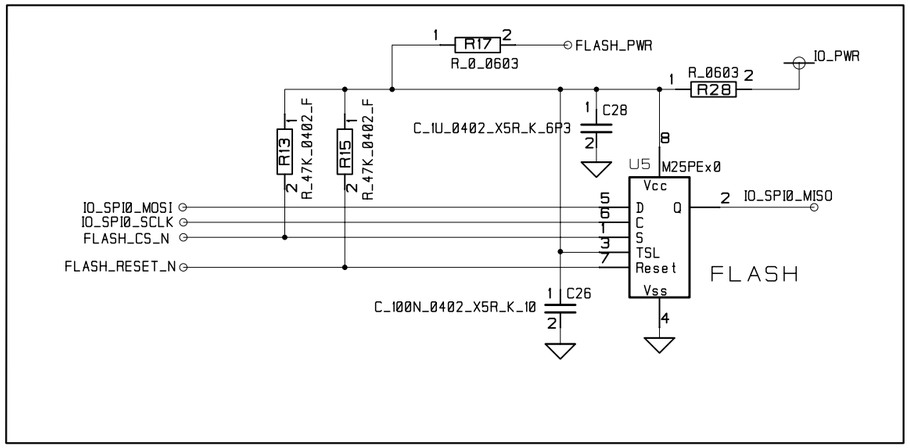

ACCELEROMETER

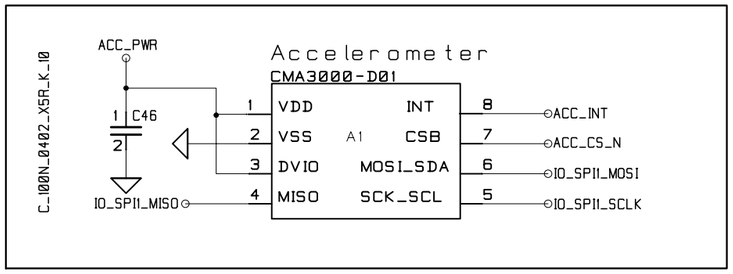

LEDS

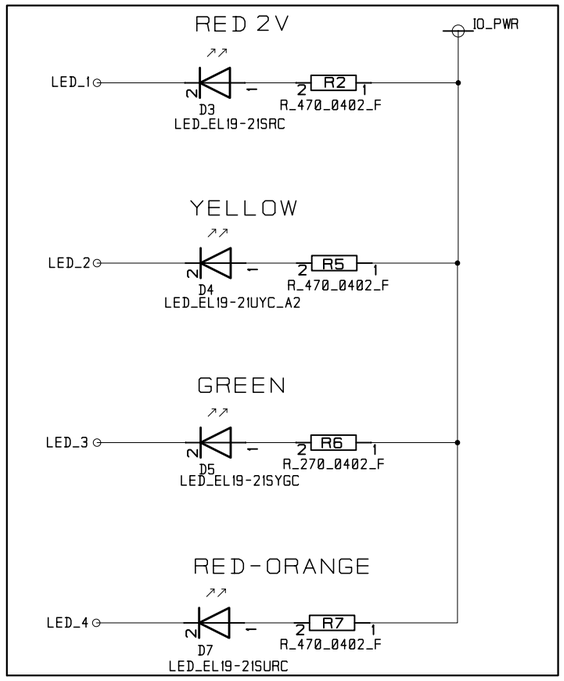

AMBIENT LIGHT SENSOR

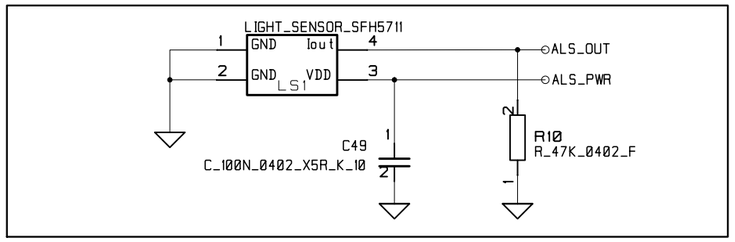

LCD

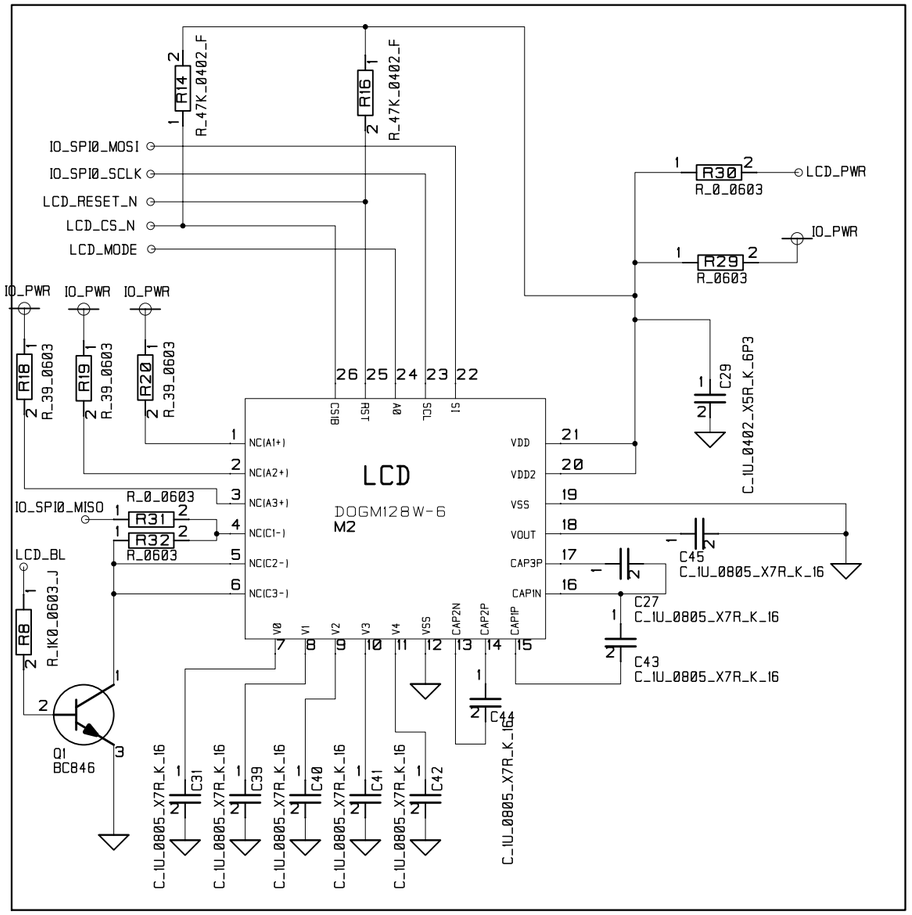

RESET BUTTONS

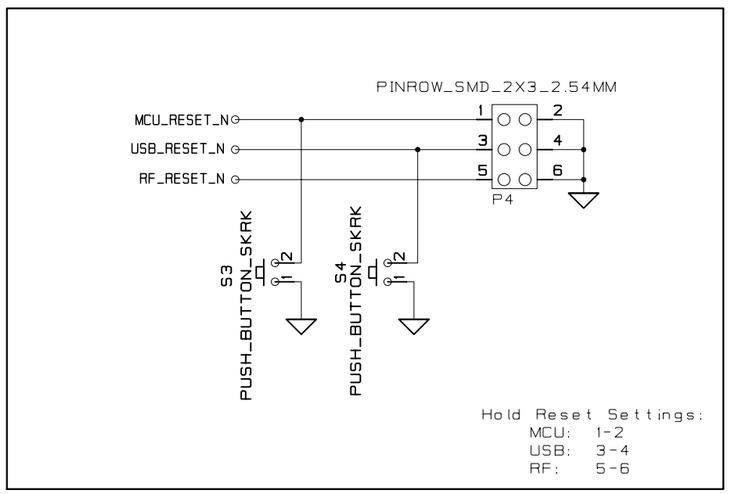

BUTTONS

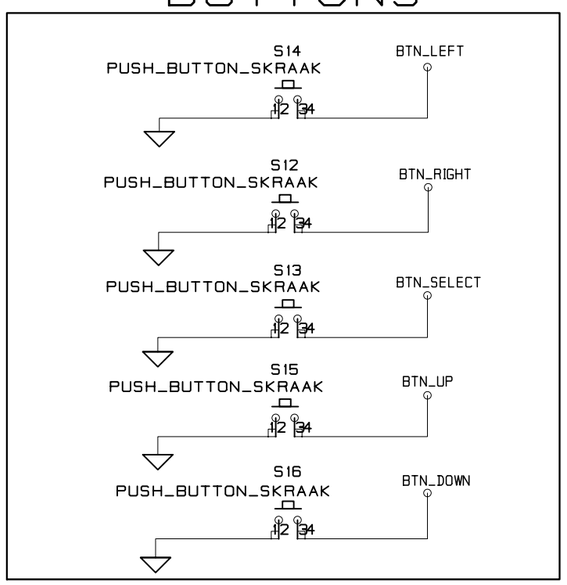

Q1,R8,R18,R19 and R20 Not Mounted when Backlight module (EA LED55x46) is not used, by default there will be no backlight module.

CONTRACT NO. XXX		COMPANY NAME TI Norway, LPW			
APPROVALS	DATE	DWG User Interface			
DRAWN	EIV OAT	SIZE A3	FSCM NO.	DWG NO.	REV. 1.5.0
CHECKED					
ISSUED		SCALE			SHEET 6(7)

EXTERNAL I/O

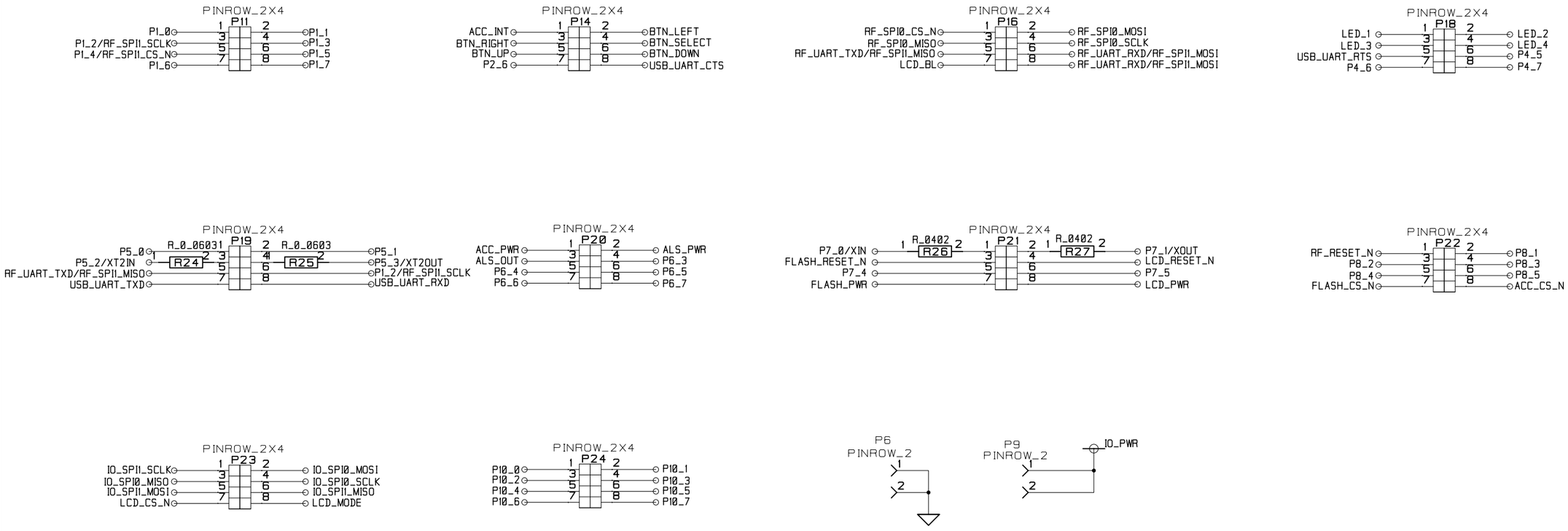

CONTRACT NO. XXX		COMPANY NAME TI Norway, LPW			
APPROVALS	DATE	DWG			
DRAWN	EIV OAT	SIZE A3	FSCM NO.	DWG NO.	REV. 1.5.0
CHECKED					
ISSUED		SCALE			SHEET 7(7)

IMPORTANT NOTICE

Texas Instruments Incorporated and its subsidiaries (TI) reserve the right to make corrections, modifications, enhancements, improvements, and other changes to its products and services at any time and to discontinue any product or service without notice. Customers should obtain the latest relevant information before placing orders and should verify that such information is current and complete. All products are sold subject to TI's terms and conditions of sale supplied at the time of order acknowledgment.

TI warrants performance of its hardware products to the specifications applicable at the time of sale in accordance with TI's standard warranty. Testing and other quality control techniques are used to the extent TI deems necessary to support this warranty. Except where mandated by government requirements, testing of all parameters of each product is not necessarily performed.

TI assumes no liability for applications assistance or customer product design. Customers are responsible for their products and applications using TI components. To minimize the risks associated with customer products and applications, customers should provide adequate design and operating safeguards.

TI does not warrant or represent that any license, either express or implied, is granted under any TI patent right, copyright, mask work right, or other TI intellectual property right relating to any combination, machine, or process in which TI products or services are used. Information published by TI regarding third-party products or services does not constitute a license from TI to use such products or services or a warranty or endorsement thereof. Use of such information may require a license from a third party under the patents or other intellectual property of the third party, or a license from TI under the patents or other intellectual property of TI.

Reproduction of TI information in TI data books or data sheets is permissible only if reproduction is without alteration and is accompanied by all associated warranties, conditions, limitations, and notices. Reproduction of this information with alteration is an unfair and deceptive business practice. TI is not responsible or liable for such altered documentation. Information of third parties may be subject to additional restrictions.

Resale of TI products or services with statements different from or beyond the parameters stated by TI for that product or service voids all express and any implied warranties for the associated TI product or service and is an unfair and deceptive business practice. TI is not responsible or liable for any such statements.

TI products are not authorized for use in safety-critical applications (such as life support) where a failure of the TI product would reasonably be expected to cause severe personal injury or death, unless officers of the parties have executed an agreement specifically governing such use. Buyers represent that they have all necessary expertise in the safety and regulatory ramifications of their applications, and acknowledge and agree that they are solely responsible for all legal, regulatory and safety-related requirements concerning their products and any use of TI products in such safety-critical applications, notwithstanding any applications-related information or support that may be provided by TI. Further, Buyers must fully indemnify TI and its representatives against any damages arising out of the use of TI products in such safety-critical applications.

TI products are neither designed nor intended for use in military/aerospace applications or environments unless the TI products are specifically designated by TI as military-grade or "enhanced plastic." Only products designated by TI as military-grade meet military specifications. Buyers acknowledge and agree that any such use of TI products which TI has not designated as military-grade is solely at the Buyer's risk, and that they are solely responsible for compliance with all legal and regulatory requirements in connection with such use.

TI products are neither designed nor intended for use in automotive applications or environments unless the specific TI products are designated by TI as compliant with ISO/TS 16949 requirements. Buyers acknowledge and agree that, if they use any non-designated products in automotive applications, TI will not be responsible for any failure to meet such requirements.

Following are URLs where you can obtain information on other Texas Instruments products and application solutions:

Products		**Applications**	
Audio	www.ti.com/audio	Communications and Telecom	www.ti.com/communications
Amplifiers	amplifier.ti.com	Computers and Peripherals	www.ti.com/computers
Data Converters	dataconverter.ti.com	Consumer Electronics	www.ti.com/consumer-apps
DLP® Products	www.dlp.com	Energy and Lighting	www.ti.com/energy
DSP	dsp.ti.com	Industrial	www.ti.com/industrial
Clocks and Timers	www.ti.com/clocks	Medical	www.ti.com/medical
Interface	interface.ti.com	Security	www.ti.com/security
Logic	logic.ti.com	Space, Avionics and Defense	www.ti.com/space-avionics-defense
Power Mgmt	power.ti.com	Transportation and Automotive	www.ti.com/automotive
Microcontrollers	microcontroller.ti.com	Video and Imaging	www.ti.com/video
RFID	www.ti-rfid.com	Wireless	www.ti.com/wireless-apps
RF/IF and ZigBee® Solutions	www.ti.com/lprf		

TI E2E Community Home Page e2e.ti.com

Mailing Address: Texas Instruments, Post Office Box 655303, Dallas, Texas 75265
Copyright © 2011, Texas Instruments Incorporated