SLLS015B – FEBRUARY 1986 – REVISED MAY 1995

- **Meets or Exceeds the Requirements of ANSI EIA/TIA-422-B and -423-B**
- **Meets or Exceeds the Requirements of ANSI EIA/TIA-232-E and ITU Recommendation V.28 With External Components**
- **Meets Federal Standards 1020 and 1030**
- **Built-in 5-MHz Low-Pass Filter**
- **Operates From Single 5-V Power Supply**
- **Wide Common-Mode Voltage Range**
- **High Input Impedance**
- **TTL-Compatible Outputs**
- **8-Pin Dual-in-Line Package**
- **Pinout Compatible With the μA9637 and μA9639**

D OR P PACKAGE
(TOP VIEW)

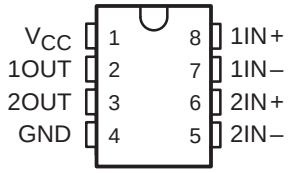

THE SN75146 IS NOT RECOMMENDED FOR NEW DESIGNS.

description

The SN75146 is a dual differential line receiver designed to meet ANSI Standards EIA/TIA-422-B and -423-B. The receiver is designed to have a constant impedance with input voltages of ±3 V to ±25 V allowing it to meet the requirements of EIA/TIA-232-E and ITU recommendation V.28 with the addition of an external bias resistor. This receiver is designed for low-speed operation below 355 kHz and has a built-in 5-MHz low-pass filter to attenuate high-frequency noise. The inputs are compatible with either a single-ended or a differential line system and the outputs are TTL compatible. This device operates from a single 5-V power supply and is supplied in both the 8-pin dual-in-line and small-outline packages.

The SN75146 is characterized for operation from 0°C to 70°C.

logic symbol†

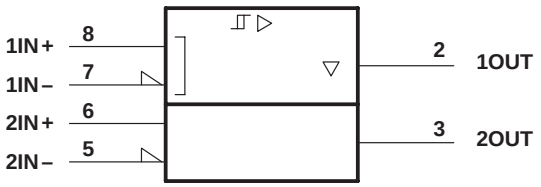

† This symbol is in accordance with ANSI/IEEE Std 91-1984 and IEC Publication 617-12.

logic diagram

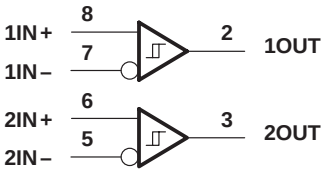

Please be aware that an important notice concerning availability, standard warranty, and use in critical applications of Texas Instruments semiconductor products and disclaimers thereto appears at the end of this data sheet.

PRODUCTION DATA information is current as of publication date. Products conform to specifications per the terms of Texas Instruments standard warranty. Production processing does not necessarily include testing of all parameters.

Copyright © 1995, Texas Instruments Incorporated

schematics of inputs and outputs

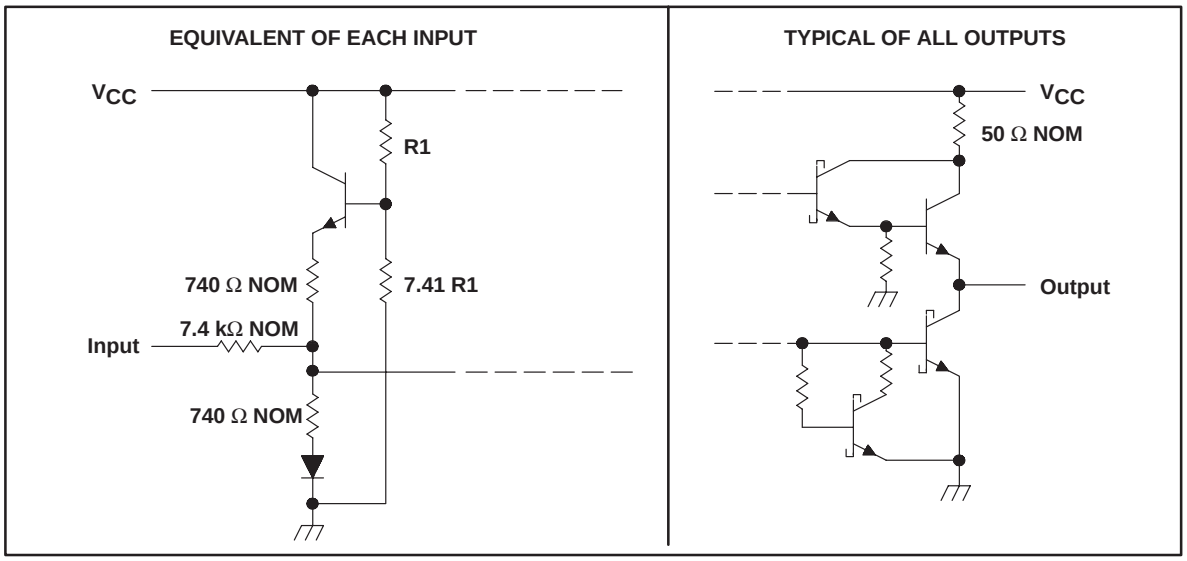

absolute maximum ratings over operating free-air temperature range (unless otherwise noted)†

Supply voltage range, V_{CC} (see Note 1) . . . . . –0.5 V to 7 V
Input voltage, V_I . . . . . ±25 V
Differential input voltage, V_{ID} (see Note 2) . . . . . ±25 V
Output voltage range, V_O (see Note 1) . . . . . –0.5 V to 5.5 V
Low-level output current, I_{OL} . . . . . 50 mA
Continuous total dissipation . . . . . See Dissipation Rating Table
Operating free-air temperature range, T_A . . . . . 0°C to 70°C
Storage temperature range, T_{stg} . . . . . – 65°C to 150°C
Lead temperature 1,6 mm (1/16 inch) from case for 10 seconds . . . . . 260°C

† Stresses beyond those listed under “absolute maximum ratings” may cause permanent damage to the device. These are stress ratings only, and functional operation of the device at these or any other conditions beyond those indicated under “recommended operating conditions” is not implied. Exposure to absolute-maximum-rated conditions for extended periods may affect device reliability.

NOTES: 1. All voltage values, except differential input voltage, are with respect to the network ground terminal.
2. Differential input voltage is measured at the noninverting input with respect to the corresponding inverting input.

DISSIPATION RATING TABLE

PACKAGE	$T_A \le 25°C$ POWER RATING	OPERATING FACTOR ABOVE $T_A = 25°C$	$T_A = 70°C$ POWER RATING
D	725 mW	5.8 mW/°C	464 mW
P	1000 mW	8.0 mW/°C	640 mW

recommended operating conditions

	MIN	NOM	MAX	UNIT
Supply voltage, V_{CC}	4.75	5	5.25	V
Common-mode input voltage, V_{IC}			±7	V
Operating free-air temperature, T_A	0	25	70	°C

electrical characteristics over recommended ranges of supply voltage, common-mode input voltage, and operating free-air temperature (unless otherwise noted)

PARAMETER		TEST CONDITIONS		MIN	TYP†	MAX	UNIT
V_{IT}	Threshold input voltage (V_{IT+} and V_{IT-})			–0.2‡		0.2	V
		See Note 3		–0.4‡		0.4	
V_{hys}	Hysteresis ($V_{IT+} - V_{IT-}$)			70			mV
V_{IB}	Input bias voltage	$I_I = 0$		2		2.4	V
V_{OH}	High-level output voltage	$V_{ID} = 0.2$ V,	$I_O = -1$ mA	2.5	3.5		V
V_{OL}	Low-level output voltage	$V_{ID} = -0.2$ V,	$I_O = 20$ mA		0.35	0.5	V
r_i	Input resistance	$V_I = 3$ V to 25 V or $V_I = -3$ V to –25 V, See Note 4		6	7.8	10.5	kΩ
I_I	Input current	$V_{CC} = 0$ to 5.5 V, See Note 5	$V_I = 10$ V		1.1	3.25	mA
			$V_I = -10$ V		–1.6	–3.25	
I_{OS}	Short-circuit output current§	$V_O = 0$,	$V_{ID} = 0.2$ V	–40	–75	–100	mA
I_{CC}	Supply current	$V_{ID} = -0.5$ V,	No load		35	50	mA

† All typical values are at $V_{CC} = 5$ V, $T_A = 25°C$.
‡ The algebraic convention, in which the less positive (more negative) limit is designated as minimum, is used in this data sheet for threshold levels only.
§ Only one output should be shorted at a time, and duration of the short circuit should not exceed one second.

NOTES: 3. The expanded threshold parameter is tested with a 500-Ω resistor in series with each input.
4. r_i is defined by $\Delta V_I/\Delta I_I$.
5. The input not under test is grounded.

switching characteristics, $V_{CC} = 5$ V, $T_A = 25°C$

PARAMETER		TEST CONDITIONS	MIN	TYP	MAX	UNIT
t_{PLH}	Propagation delay time, low-to-high-level output	$C_L = 30$ pF, See Figure 1	100	150	300	ns
t_{PHL}	Propagation delay time, high-to-low-level output		100	150	300	ns

PARAMETER MEASUREMENT INFORMATION

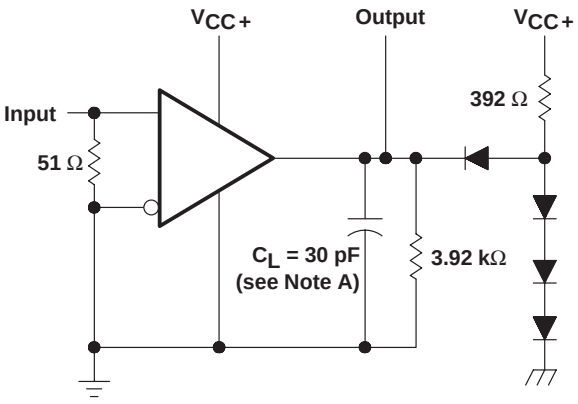

TEST CIRCUIT

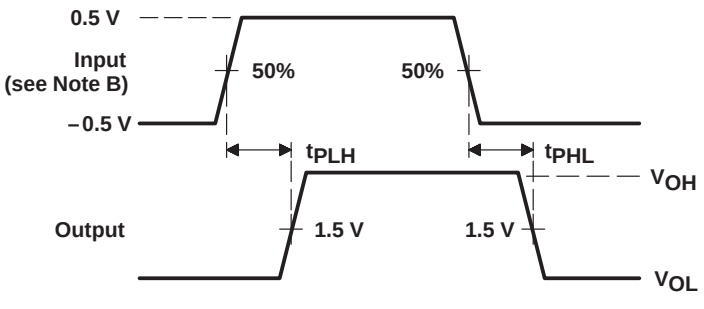

VOLTAGE WAVEFORMS

NOTES: A. C_L includes probe and jig capacitance.
B. The input pulse is supplied by a generator having the following characteristics: $t_r \le 5$ ns, $t_f \le 5$ ns, PRR ≤ 300 kHz, duty cycle = 50%.

Figure 1. Test Circuit and Voltage Waveforms

TYPICAL CHARACTERISTICS

OUTPUT VOLTAGE vs DIFFERENTIAL INPUT VOLTAGE

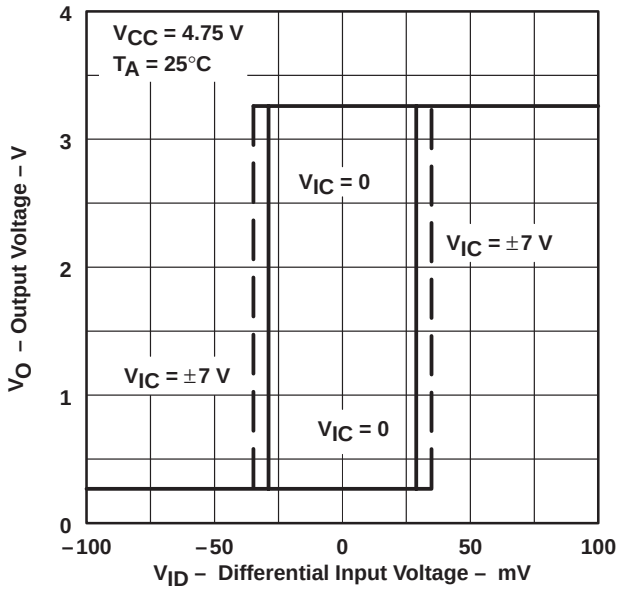

Figure 2

OUTPUT VOLTAGE vs DIFFERENTIAL INPUT VOLTAGE

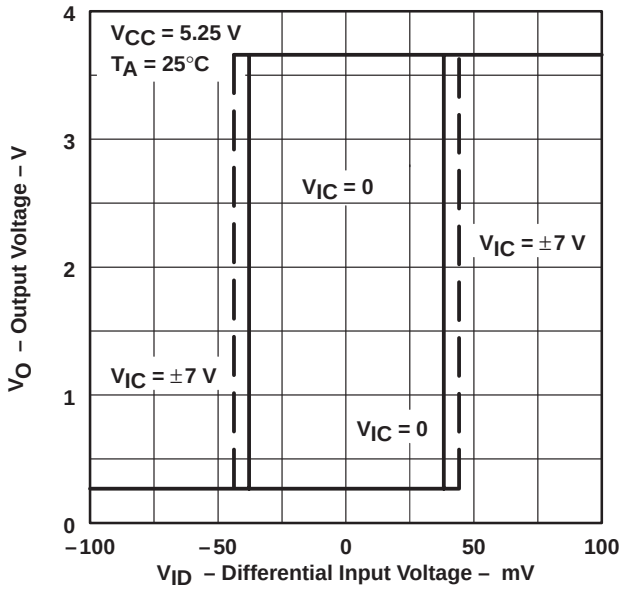

Figure 3

APPLICATION INFORMATION

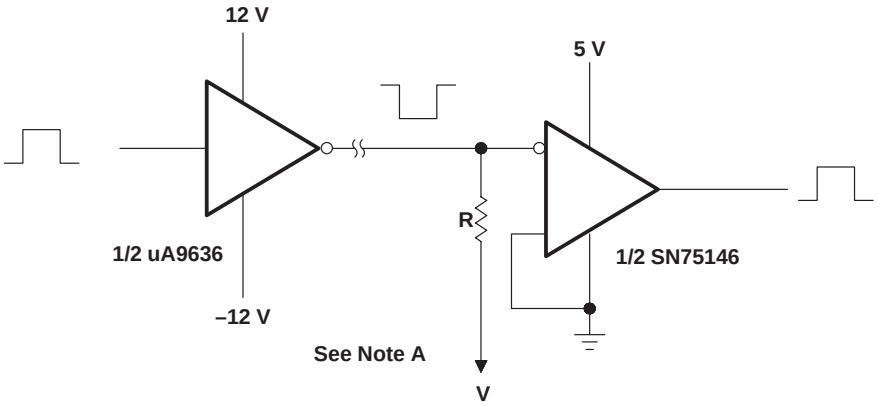

NOTE A: In order to meet the input-impedance and open-circuit-input voltage requirements of ANSI Standard EIA/TIA-232-E and ITU recommendation V.28 and ensure open-circuit-input fail-safe operation, R and V are selected to satisfy the following equations:

$$V = -1.1 - 3.3\,\frac{R}{r_i}\ \text{volts}$$

$$3\ \text{k}\Omega \le \frac{R\left(r_i\right)}{R + r_i} \le 7\ \text{k}\Omega$$

Figure 4. EIA/TIA-232-E System Applications

APPLICATION INFORMATION

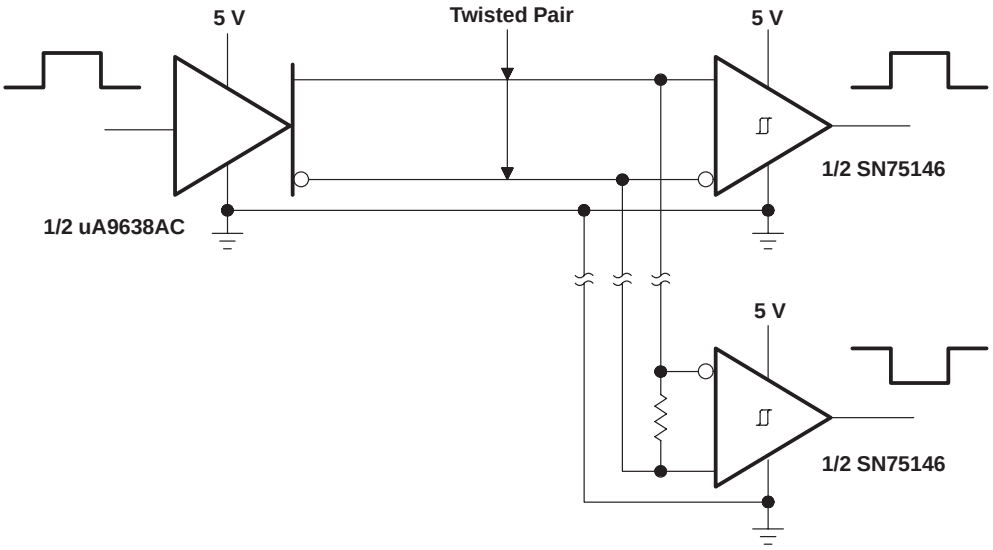

Figure 5. EIA/TIA-422-B System Applications

PACKAGING INFORMATION

Orderable Device	Status [1]	Package Type	Package Drawing	Pins	Package Qty	Eco Plan [2]	Lead/Ball Finish	MSL Peak Temp [3]
SN75146D	ACTIVE	SOIC	D	8	75	Green (RoHS & no Sb/Br)	CU NIPDAU	Level-2-260C-1 YEAR
SN75146DE4	ACTIVE	SOIC	D	8	75	Green (RoHS & no Sb/Br)	CU NIPDAU	Level-2-260C-1 YEAR
SN75146DG4	ACTIVE	SOIC	D	8	75	Green (RoHS & no Sb/Br)	CU NIPDAU	Level-2-260C-1 YEAR
SN75146P	OBSOLETE	PDIP	P	8		TBD	Call TI	Call TI

[1] The marketing status values are defined as follows:
ACTIVE: Product device recommended for new designs.
LIFEBUY: TI has announced that the device will be discontinued, and a lifetime-buy period is in effect.
NRND: Not recommended for new designs. Device is in production to support existing customers, but TI does not recommend using this part in a new design.
PREVIEW: Device has been announced but is not in production. Samples may or may not be available.
OBSOLETE: TI has discontinued the production of the device.

[2] Eco Plan - The planned eco-friendly classification: Pb-Free (RoHS), Pb-Free (RoHS Exempt), or Green (RoHS & no Sb/Br) - please check http://www.ti.com/productcontent for the latest availability information and additional product content details.
TBD: The Pb-Free/Green conversion plan has not been defined.
Pb-Free (RoHS): TI's terms "Lead-Free" or "Pb-Free" mean semiconductor products that are compatible with the current RoHS requirements for all 6 substances, including the requirement that lead not exceed 0.1% by weight in homogeneous materials. Where designed to be soldered at high temperatures, TI Pb-Free products are suitable for use in specified lead-free processes.
Pb-Free (RoHS Exempt): This component has a RoHS exemption for either 1) lead-based flip-chip solder bumps used between the die and package, or 2) lead-based die adhesive used between the die and leadframe. The component is otherwise considered Pb-Free (RoHS compatible) as defined above.
Green (RoHS & no Sb/Br): TI defines "Green" to mean Pb-Free (RoHS compatible), and free of Bromine (Br) and Antimony (Sb) based flame retardants (Br or Sb do not exceed 0.1% by weight in homogeneous material)

[3] MSL, Peak Temp. -- The Moisture Sensitivity Level rating according to the JEDEC industry standard classifications, and peak solder temperature.

Important Information and Disclaimer: The information provided on this page represents TI's knowledge and belief as of the date that it is provided. TI bases its knowledge and belief on information provided by third parties, and makes no representation or warranty as to the accuracy of such information. Efforts are underway to better integrate information from third parties. TI has taken and continues to take reasonable steps to provide representative and accurate information but may not have conducted destructive testing or chemical analysis on incoming materials and chemicals. TI and TI suppliers consider certain information to be proprietary, and thus CAS numbers and other limited information may not be available for release.

In no event shall TI's liability arising out of such information exceed the total purchase price of the TI part(s) at issue in this document sold by TI to Customer on an annual basis.

P (R-PDIP-T8) **PLASTIC DUAL-IN-LINE**

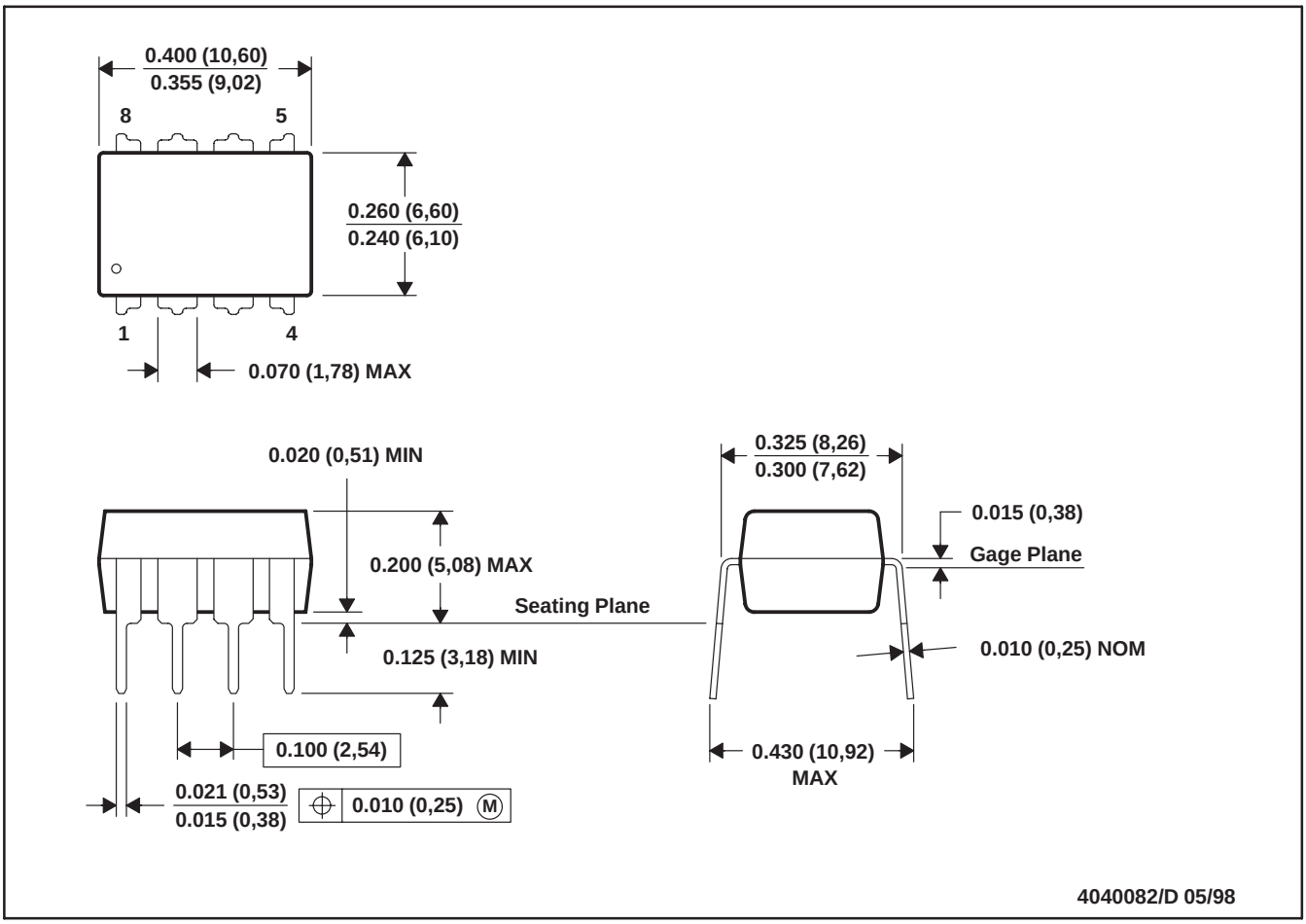

NOTES: A. All linear dimensions are in inches (millimeters).
B. This drawing is subject to change without notice.
C. Falls within JEDEC MS-001

D (R–PDSO–G8) PLASTIC SMALL–OUTLINE PACKAGE

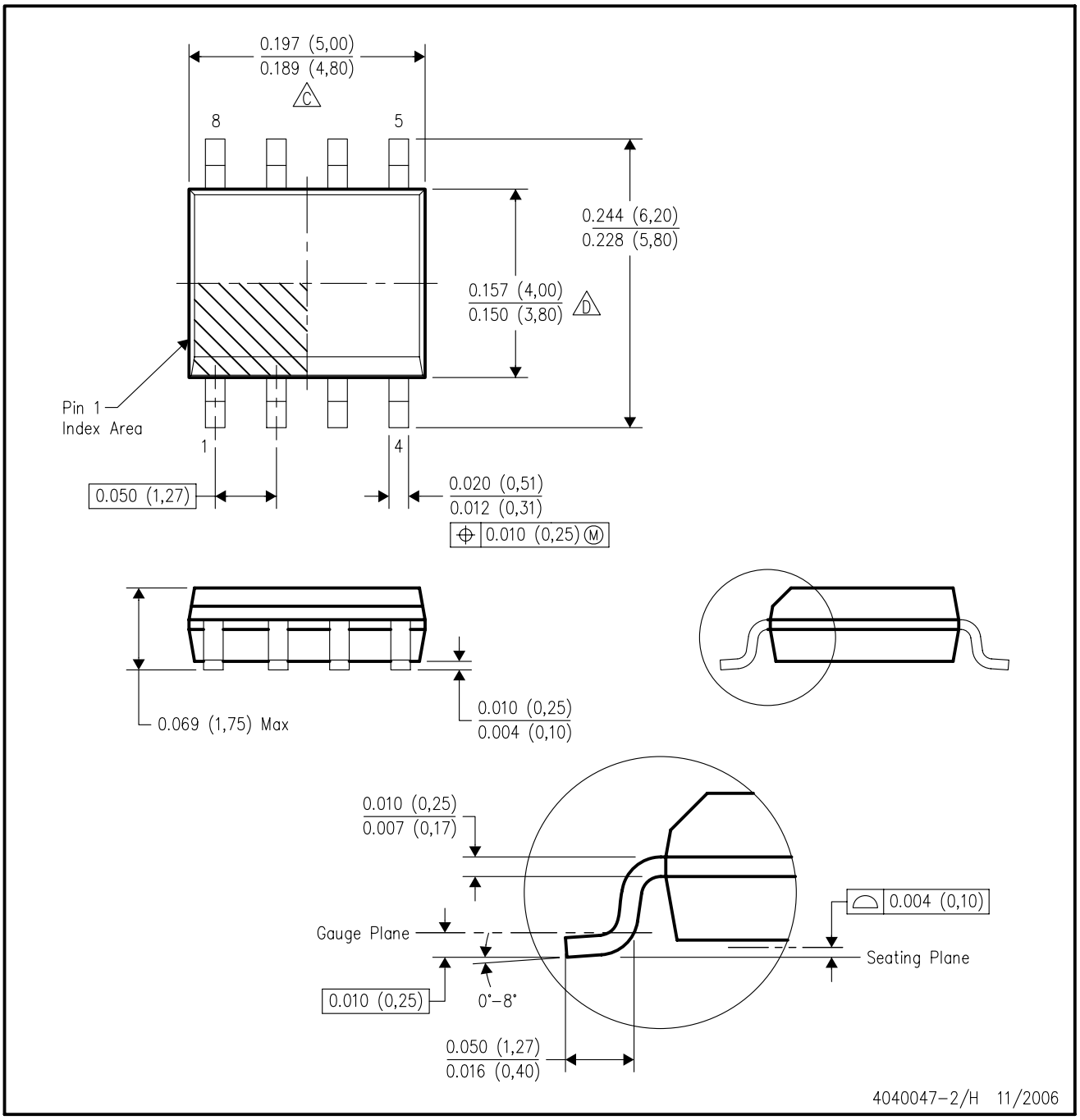

NOTES:
- A. All linear dimensions are in inches (millimeters).
- B. This drawing is subject to change without notice.
- C. Body length does not include mold flash, protrusions, or gate burrs. Mold flash, protrusions, or gate burrs shall not exceed .006 (0,15) per end.
- D. Body width does not include interlead flash. Interlead flash shall not exceed .017 (0,43) per side.
- E. Reference JEDEC MS–012 variation AA.

IMPORTANT NOTICE

Texas Instruments Incorporated and its subsidiaries (TI) reserve the right to make corrections, modifications, enhancements, improvements, and other changes to its products and services at any time and to discontinue any product or service without notice. Customers should obtain the latest relevant information before placing orders and should verify that such information is current and complete. All products are sold subject to TI's terms and conditions of sale supplied at the time of order acknowledgment.

TI warrants performance of its hardware products to the specifications applicable at the time of sale in accordance with TI's standard warranty. Testing and other quality control techniques are used to the extent TI deems necessary to support this warranty. Except where mandated by government requirements, testing of all parameters of each product is not necessarily performed.

TI assumes no liability for applications assistance or customer product design. Customers are responsible for their products and applications using TI components. To minimize the risks associated with customer products and applications, customers should provide adequate design and operating safeguards.

TI does not warrant or represent that any license, either express or implied, is granted under any TI patent right, copyright, mask work right, or other TI intellectual property right relating to any combination, machine, or process in which TI products or services are used. Information published by TI regarding third-party products or services does not constitute a license from TI to use such products or services or a warranty or endorsement thereof. Use of such information may require a license from a third party under the patents or other intellectual property of the third party, or a license from TI under the patents or other intellectual property of TI.

Reproduction of information in TI data books or data sheets is permissible only if reproduction is without alteration and is accompanied by all associated warranties, conditions, limitations, and notices. Reproduction of this information with alteration is an unfair and deceptive business practice. TI is not responsible or liable for such altered documentation.

Resale of TI products or services with statements different from or beyond the parameters stated by TI for that product or service voids all express and any implied warranties for the associated TI product or service and is an unfair and deceptive business practice. TI is not responsible or liable for any such statements.

TI products are not authorized for use in safety-critical applications (such as life support) where a failure of the TI product would reasonably be expected to cause severe personal injury or death, unless officers of the parties have executed an agreement specifically governing such use. Buyers represent that they have all necessary expertise in the safety and regulatory ramifications of their applications, and acknowledge and agree that they are solely responsible for all legal, regulatory and safety-related requirements concerning their products and any use of TI products in such safety-critical applications, notwithstanding any applications-related information or support that may be provided by TI. Further, Buyers must fully indemnify TI and its representatives against any damages arising out of the use of TI products in such safety-critical applications.

TI products are neither designed nor intended for use in military/aerospace applications or environments unless the TI products are specifically designated by TI as military-grade or "enhanced plastic." Only products designated by TI as military-grade meet military specifications. Buyers acknowledge and agree that any such use of TI products which TI has not designated as military-grade is solely at the Buyer's risk, and that they are solely responsible for compliance with all legal and regulatory requirements in connection with such use.

TI products are neither designed nor intended for use in automotive applications or environments unless the specific TI products are designated by TI as compliant with ISO/TS 16949 requirements. Buyers acknowledge and agree that, if they use any non-designated products in automotive applications, TI will not be responsible for any failure to meet such requirements.

Following are URLs where you can obtain information on other Texas Instruments products and application solutions:

Products		**Applications**	
Amplifiers	amplifier.ti.com	Audio	www.ti.com/audio
Data Converters	dataconverter.ti.com	Automotive	www.ti.com/automotive
DSP	dsp.ti.com	Broadband	www.ti.com/broadband
Interface	interface.ti.com	Digital Control	www.ti.com/digitalcontrol
Logic	logic.ti.com	Military	www.ti.com/military
Power Mgmt	power.ti.com	Optical Networking	www.ti.com/opticalnetwork
Microcontrollers	microcontroller.ti.com	Security	www.ti.com/security
RFID	www.ti-rfid.com	Telephony	www.ti.com/telephony
Low Power Wireless	www.ti.com/lpw	Video & Imaging	www.ti.com/video
		Wireless	www.ti.com/wireless

Mailing Address: Texas Instruments, Post Office Box 655303, Dallas, Texas 75265
Copyright © 2007, Texas Instruments Incorporated