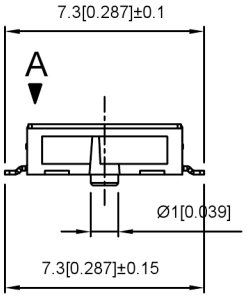

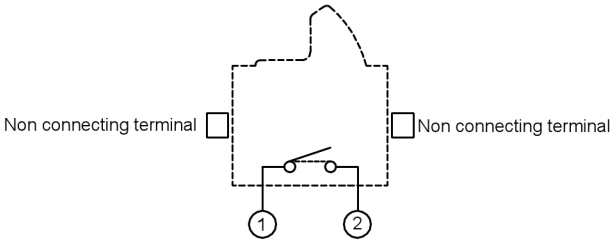

Circuit diagram: normally open (N.O.)

1 circuit 1 contact

Terminal arrangement (viewed from direction a)

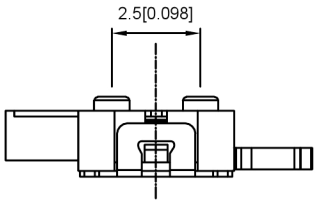

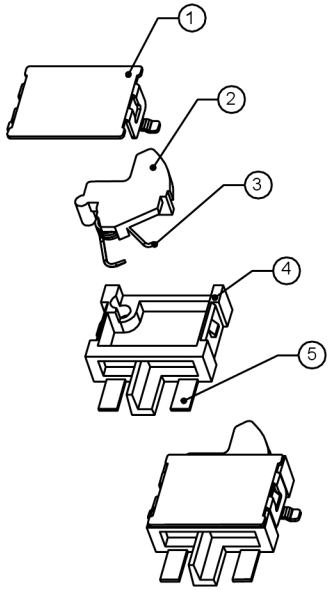

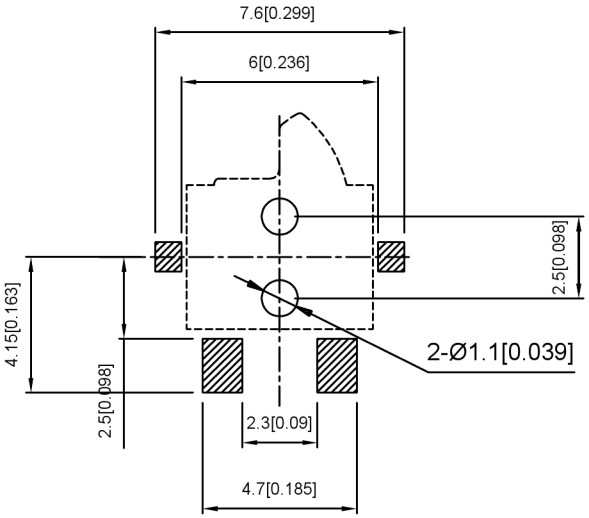

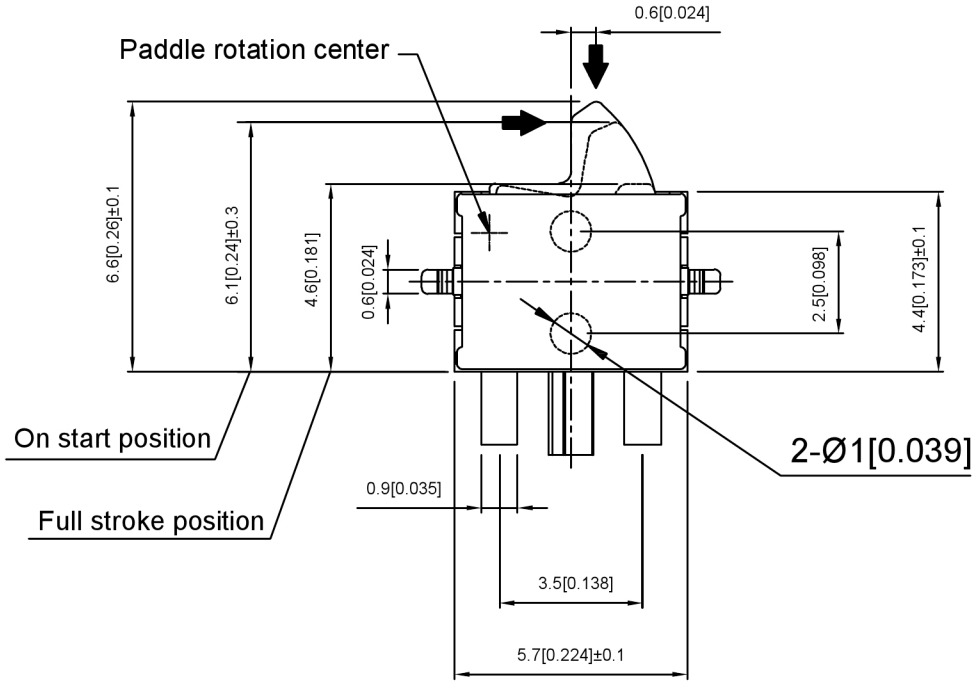

5	Welding leg	1	Bass	
4	Pedestal	1	LCP	grey
3	Spring	1	Phosphor copper	
2	Button	1	LCP	grey
1	lid	1	SUS	
ITEM	PAPT NAMF	QTY	Material	

广东星坤科技股份有限公司
文件工程章

MARK	DESCRIPTION	DATE	REVISED	APPROVED
Δx				
Δx				
Δx				

REVISIONS

www.helloxkb.com www.helloxkb.cn www.xk-dg.cn

UNSPECIFIED TOLERANCES	
ANGLAR	±5°
L≤ 4	±0.2
4<L≤ 16	±0.3
16<L≤ 63	±0.4
L> 63	±0.5

XKB INDUSTRIAL PRECISION CO.,LIMITED

DSND		SCALE: N/A	MODEL TYPE: TACT SWITCH
DWN		VIEW:	PART NO.: TM-1617SB
CHKD		UNIT: mm/in	DWG NO.:
APPD		SIZE: A4	

WEIGHT	SHEET	REVISIC
	1/1	A0