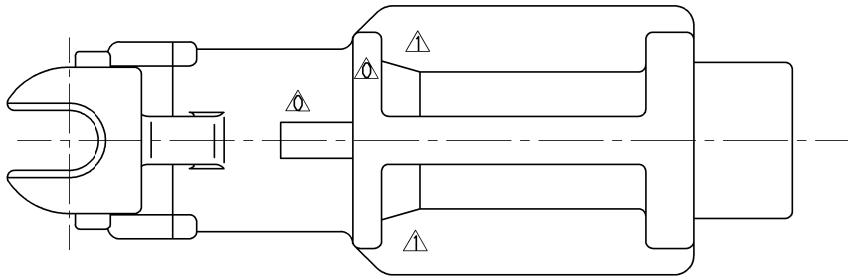

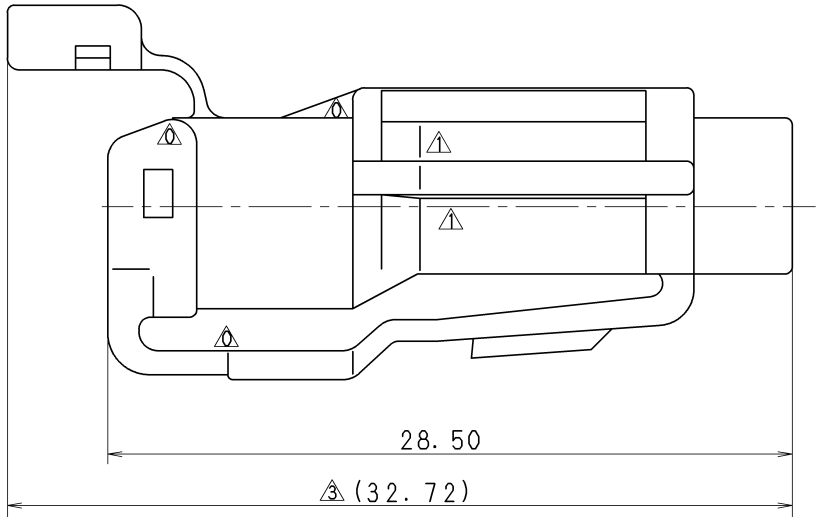

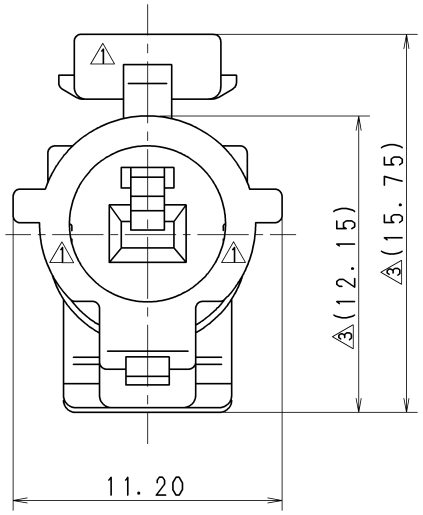

注記

1. かん合相手品 : 7222-7414-30 ETC.
2. 適用端子品番 : 7116-1471 ETC.
3. 適用ゴム栓品番 : 7157-7897-60 ETC.
4. 適用空栓品番 : 7157-3755-60 ETC.

NOTES

1. MATING PART NO. : 7222-7414-30 ETC.
2. APPLICABLE TERMINAL PART NO. : 7116-1471 ETC.
3. APPLICABLE RUBBER STOPPER PART NO. : 7157-7897-60 ETC.
4. APPLICABLE SEALING PULG PART NO. : 7157-3755-60 ETC.

YAZAKI PART NO. AND CH. CODE	COLOR
7123-7414-30	BLACK
7123-7414-40	GRAY

LET	DATE	REVISION RECORD	NO.	CHKD
4	10.11.15	CHANGED PART NAME	C10-ZA99	R.B
3	09.09.30	DELETED VIEW, ETC.	C09-Z608	T.W
2	89.04.22	ADDED PART NO.	C89-6857	矢部
1	89.04.29	CHANGED FORM	C89-6673	矢部
0	89.01.13	NEW	C89-6099	矢部

3 GENERAL TOLERANCE

	10MAX	50MAX	100MAX	250MAX	2500VR	ANGLE	ECCENT
A	±0.15	±0.2	±0.3	±0.5	±0.75	±30′	0.1
B	±0.2	±0.3	±0.55	±0.95	±1.4	±30′	0.1
C	±0.3	±0.5	±0.8	±1.4	±2	±30′	0.15

SPECIFIED

MASS

CUSTOMER

CUSTOMER PART NO. | CUSTOMER DWG NO.

OFFICE | TRIAL PART NO.

VENDOR

VENDOR NO.

DWG TYPE	DWG SOURCE	DWG DATE	UNIT	SCL	ANGLE
R	NEW	89.01.23	mm	5/1	3

APPROVED	CHECKED	CHECKED	DESIGN	DRAWN
S. MIZUSE	———	R. CABANGAL	KODAMA	R. BUDIAO
10.11.15	———	10.11.15	89.01.13	10.11.15

MATL. SPEC. PBT

TREAT. & FIN.

NAME 4 SWP-TYPE HOUSING 1P FEMALE

PART NO. / CH. CODE 7123-7414-40 ETC.

DWG NO. 2 7123-7414-30 : R

SET DWG NO.

YAZAKI CORPORATION

ISSUE MARK