ASSEMBLY NO AND CH. CODE	NO.	PART NO. AND CH. CODE	PART NAME	MATERIAL	COLOR	QTY.
7287-9155 (7C87-9155)	①	7187-9155 (7B87-9155)	0.64Ⅱ 20P CAN J/C HOUSING FEMALE	PBT	NATURAL	1
	②	7172-0707 (7B72-0707)	0.64Ⅱ 20P CAN J/C SPACER FEMALE	PBT	NATURAL	1

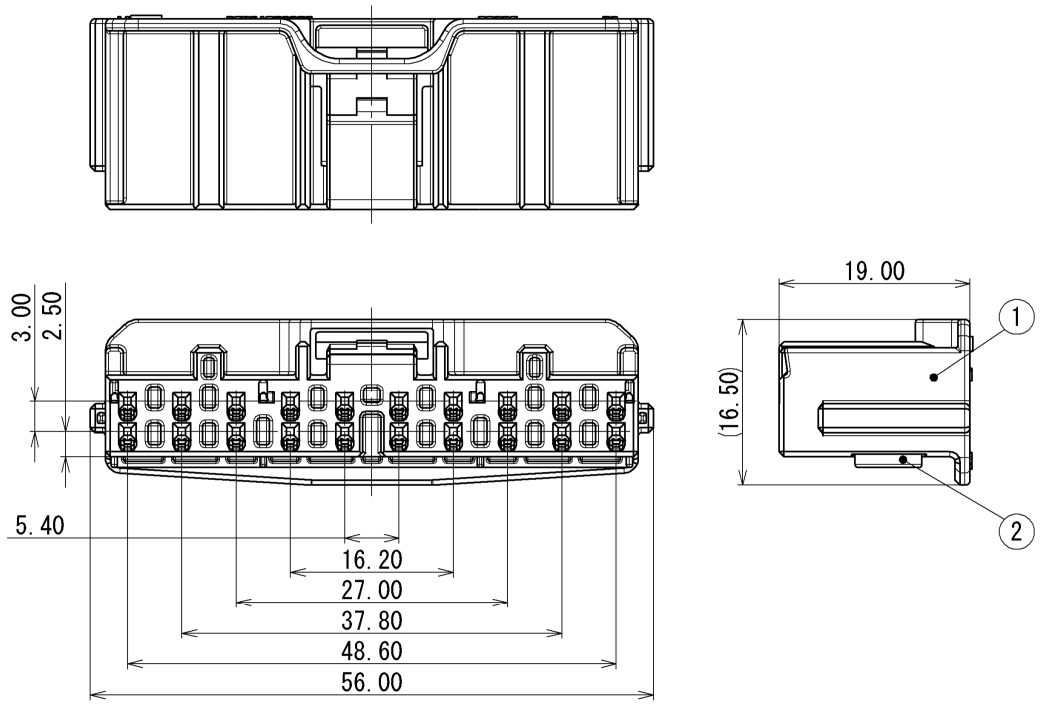

注記

1. 取扱説明書No.:YPES-15-998
2. ( ) 内の品番はA/B回路及び特別管理回路に使用すること。

NOTES

1. HANDLING MANUAL NO.:YPES-15-998
2. PART NUMBERS IN PARENTHESIS SHALL BE USED FOR AIR BAG(A/B) CIRCUITS AND OTHER CIRCUITS DESIGNATED FOR SPECIAL MONITORING.

GENERAL TOLERANCE											
	10 MAX	50 MAX	100 MAX	250 MAX	250 OVR	R5 MAX	R10 MAX	R20 MAX	R20 OVR	ANGLE	ECCENT
A	±0.15	±0.2	±0.3	±0.5	±0.75	±0.2	±0.3	±0.5	±2.5	±3°	0.1
B	±0.2	±0.3	±0.55	±0.95	±1.4					±3°	0.1
Ⓒ	±0.3	±0.5	±0.8	±1.4	±2					±3°	0.15

LET	DATE	REVISION RECORD	NO.	CHKD
	2013/10/16	NEW	C13-Z466	S.S

GENERAL TOLERANCE							
	10MAX	50MAX	100MAX	250MAX	250OVR	ANGLE	ECCENT
A	±0.15	±0.2	±0.3	±0.5	±0.75	±30'	0.1
B	±0.2	±0.3	±0.55	±0.95	±1.4	±30'	0.1
C	±0.3	±0.5	±0.8	±1.4	±2	±30'	0.15

SPECIFIED

MASS

CUSTOMER

CUSTOMER PART NO.

CUSTOMER DWG NO.

OFFICE

TRIAL PART NO.

VENDOR

VENDOR NO.

DWG TYPE	DWG SOURCE	DWG DATE	UNIT	SCL	ANGLE
R	NEW	2013/10/16	mm	2:1	3

APPROVED	CHECKED	CHECKED	DESIGN	DRAWN
M. FUKUDA	N. SAKAMOTO	———	S. KODAMA	S. SANCEDA
2013/10/16	2013/10/16	———	2012/08/03	2013/10/16

MATL. SPEC. SEE TABLE

TREAT. & FIN.

NAME 0.64Ⅱ 20P CAN J/C HOUSING FEMALE SUB ASSEMBLY

PART NO. CH. CODE 7287-9155 (7C87-9155)

DWG NO. 7287-9155:R

SET DWG NO.

YAZAKI CORPORATION

ISSUE MARK