Panasonic
ideas for life

MINIATURE PC BOARD, TWIN TYPE, 1 FORM C AUTOMOTIVE RELAY

TB RELAYS (ACTB)

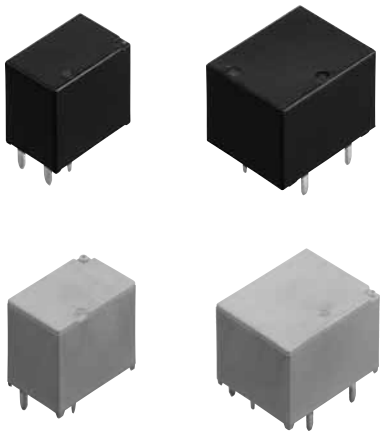

FEATURES

- Compact and high-capacity 25 A load switching
- Wide line-up
- Pin in Paste compatible model added

TYPICAL APPLICATIONS

- Power windows, Auto door lock, Electrically powered mirrors, Power sunroof, Powered seats, Lift gates and Slide door closers, etc. for DC motor forward/reverse control circuits

ORDERING INFORMATION

ACTB □ □ □ □

Contact arrangement
1: 1 Form A
2: 1 Form C
3: 1 Form C × 2 (8 terminals type)
5: 1 Form C × 2 (10 terminals type)

Contact type
Nil: Standard type
L: Lamp control type

Heat resistance/Protective construction
Nil: Standard type/Sealed type
H: High heat-resistant type/Sealed type
R: Pin in Paste type/Flux tight type

Coil resistance
1: 100Ω
2: 160Ω
3: 225Ω

Downloaded From Oneyac.com

TYPES

Contact arrangement	Contact type	Coil resistance	Part No.		
			Heat resistance		
			Standard type	High heat-resistant type	Pin in Paste type
1 Form A	Standard type	100Ω	ACTB11	ACTB1H1	ACTB1R1
		160Ω	ACTB12	ACTB1H2	ACTB1R2
		225Ω	ACTB13	ACTB1H3	ACTB1R3
	Lamp control type	100Ω	ACTB1L1	ACTB1LH1	ACTB1LR1
		160Ω	ACTB1L2	ACTB1LH2	ACTB1LR2
		225Ω	ACTB1L3	ACTB1LH3	ACTB1LR3
1 Form C	Standard type	100Ω	ACTB21	ACTB2H1	ACTB2R1
		160Ω	ACTB22	ACTB2H2	ACTB2R2
		225Ω	ACTB23	ACTB2H3	ACTB2R3
	Lamp control type	100Ω	ACTB2L1	ACTB2LH1	ACTB2LR1
		160Ω	ACTB2L2	ACTB2LH2	ACTB2LR2
		225Ω	ACTB2L3	ACTB2LH3	ACTB2LR3
1 Form C × 2 (8 terminals type)	Standard type	100Ω	ACTB31	ACTB3H1	ACTB3R1
		160Ω	ACTB32	ACTB3H2	ACTB3R2
		225Ω	ACTB33	ACTB3H3	ACTB3R3
1 Form C × 2 (10 terminals type)	Standard type	100Ω	ACTB51	ACTB5H1	ACTB5R1
		160Ω	ACTB52	ACTB5H2	ACTB5R2
		225Ω	ACTB53	ACTB5H3	ACTB5R3
	Lamp control type	100Ω	ACTB5L1	ACTB5LH1	ACTB5LR1
		160Ω	ACTB5L2	ACTB5LH2	ACTB5LR2
		225Ω	ACTB5L3	ACTB5LH3	ACTB5LR3

Standard packing; Carton (tube): 50 pcs.; Case: 2,000 pcs. (1 Form C)
Carton (tube): 25 pcs.; Case: 1,000 pcs. (1 Form C × 2)

RATING

1. Coil data

Nominal coil voltage	Pick-up voltage (at 20°C 68°F)	Drop-out voltage (at 20°C 68°F)	Nominal operating current [±10%] (at 20°C 68°F)	Coil resistance [±10%] (at 20°C 68°F)	Nominal operating power (at 20°C 68°F)	Usable voltage range
12V DC	Max. 5.5V DC (Initial)	Min. 0.5V DC (Initial)	120 mA	100Ω	1,440 mW	10 to 16V DC
	Max. 6.5V DC (Initial)	Min. 0.8V DC (Initial)	75 mA	160Ω	900 mW	
	Max. 7.7V DC (Initial)	Min. 0.8V DC (Initial)	53.3 mA	225Ω	640 mW	

Note: Other pick-up voltage types are also available. Please contact us for details.

Downloaded From Oneyac.com

2. Specifications

Characteristics	Item		Specifications
Contact	Arrangement		1 Form A, 1 Form C, 1 Form C × 2
	Contact resistance (Initial)		N.O.: Typ3mΩ, N.C.: Typ4mΩ (By voltage drop 6V DC 1A)
	Contact material		Ag alloy (Cadmium free)
Rating	Nominal switching capacity (resistive load)		N.O.: 20A 14V DC, N.C.: 10A 14V DC
	Max. carrying current (12V DC initial)*3		25A for 10 minutes (at 20°C 68°F)
	Nominal operating power		1,440 mW (Pick-up voltage 5.5V DC type)
			900 mW (Pick-up voltage 6.5V DC type)
			640 mW (Pick-up voltage 7.7V DC type)
	Min. switching capacity (resistive load)*1		1A 14V DC
Electrical characteristics	Insulation resistance (Initial)		Min. 100 MΩ (at 500V DC, Measurement at same location as “Breakdown voltage” section.)
	Breakdown voltage (Initial)	Between open contacts	500 Vrms for 1 min. (Detection current: 10mA)
		Between contacts and coil	500 Vrms for 1 min. (Detection current: 10mA)
	Operate time (at nominal voltage)		Max. 10ms (at 20°C 68°F, excluding contact bounce time) (Initial)
	Release time (at nominal voltage)		Max. 10ms (at 20°C 68°F, excluding contact bounce time) (Initial) (without protective element)
Mechanical characteristics	Shock resistance	Functional	Min. 100 m/s² {10G} (Half-wave pulse of sine wave: 11ms; detection time: 10μs)
		Destructive	Min. 1,000 m/s² {100G} (Half-wave pulse of sine wave: 6ms)
	Vibration resistance	Functional	10 Hz to 100 Hz, Min. 44.1 m/s² {4.5G} (Detection time: 10μs)
		Destructive	10 Hz to 500 Hz, Min. 44.1 m/s² {4.5G}, Time of vibration for each direction; X, Y direction: 2 hours, Z direction: 4 hours
Expected life	Mechanical		Min. 10^7 (at 120 cpm)
	Electrical		<Resistive load> Min. 10^5 (at nominal switching capacity, operating frequency: 1s ON, 9s OFF)
			<Motor load> Min. 10^5 (25 A 14V DC at motor lock condition), operating frequency: 0.5s ON, 9.5s OFF
			<Lamp load>*4 Min. 10^5 (at 56 A (inrush), 8A (steady), 14 V DC), Operating frequency: 1s ON, 14s OFF Applies only to lamp control type
Conditions	Conditions for operation, transport and storage*2		Standard type Ambient temperature: –40°C to +85°C –40°F to +185°F, Humidity: 5% R.H. to 85% R.H. High heat-resistant/Pin in Paste type Ambient temperature: –40°C to +110°C –40°F to +230°F, Humidity: 2% R.H. to 85% R.H. (Not freezing and condensing at low temperature)
Mass			Single type: approx. 5 g .176 oz, Twin type: approx. 9.5 g .335 oz

Notes:
*1.This value can change due to the switching frequency, environmental conditions, and desired reliability level, therefore it is recommended to check this with the actual load.
*2.The upper operation ambient temperature limit is the maximum temperature that can satisfy the coil temperature rise value. Refer to “6. Usage, Storage and Transport Conditions“ in AMBIENT ENVIRONMENT section in Relay Technical Information.
Please inquire if you will be using the relay in a high temperature atmosphere (110°C 230°F).
*3.Depends on connection conditions. Also, this does not guarantee repeated switching. We recommend that you confirm operation under actual conditions.
*4.Part numbers for electric discharge lamp loads or any other lamp loads and for capacitor loads only consist of “ACTB∗L∗∗”.
When using the lamp control type, connect N.O. to the “+ (plus)” side. Please contact us for details.

* If the relay is used continuously for long periods of time with coils on both sides in an energized condition, breakdown might occur due to abnormal heating depending on the carrying condition. Therefore, please inquire when using with a circuit that causes an energized condition on both sides simultaneously.

Downloaded From Oneyac.com

REFERENCE DATA

1.-(1) Coil temperature rise (at room temperature)
Sample: ACTB32, 3pcs.
Contact carrying current: 0A, 10A, 20A
Ambient temperature: Room temperature

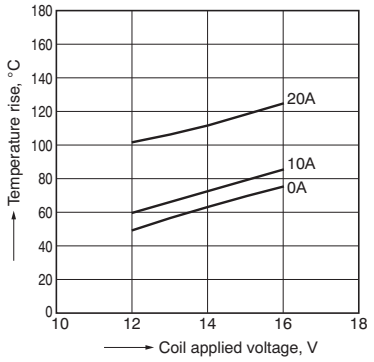

1.-(2) Coil temperature rise (at 85°C 185°F)
Sample: ACTB32, 3pcs.
Contact carrying current: 0A, 10A, 20A
Ambient temperature: 85°C 185°F

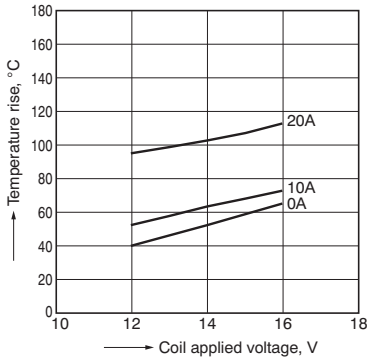

2. Ambient temperature and operating voltage range
Sample: ACTB32

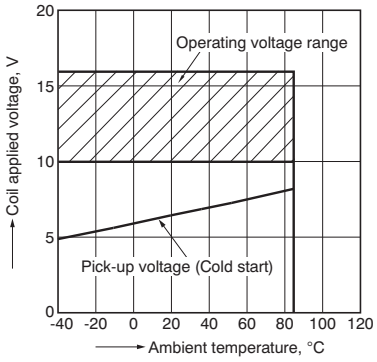

3. Distribution of pick-up and drop-out voltage
Sample: ACTB32, 40 × 2pcs.

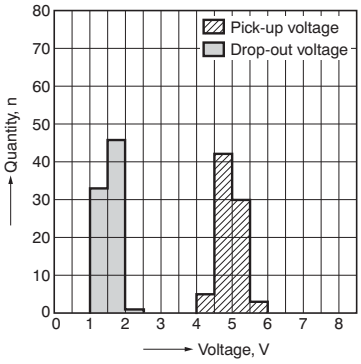

4. Distribution of operate and release time
Sample: ACTB32, 40 × 2pcs.

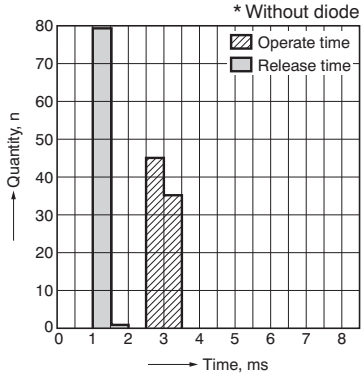

5.-(1) Electrical life test (Motor lock)
Sample: ACTB32, 3pcs.
Load: 25A 14V DC
Power window motor actual load (lock condition)
Operating frequency: ON 0.5s, OFF 9.5s
Ambient temperature: Room temperature
Circuit:

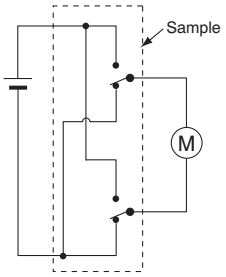

Change of pick-up and drop-out voltage

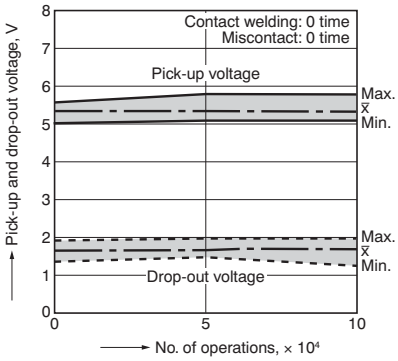

Change of contact resistance

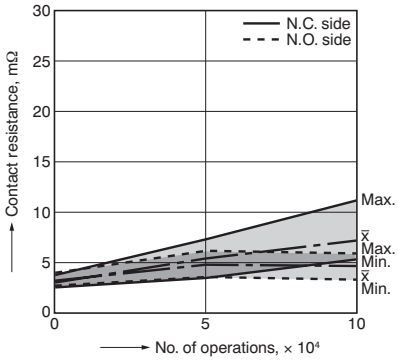

Load current waveform

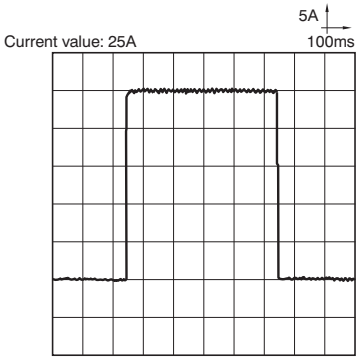

Downloaded From Oneyac.com

DIMENSIONS (mm inch)

1 Form A type

External dimensions

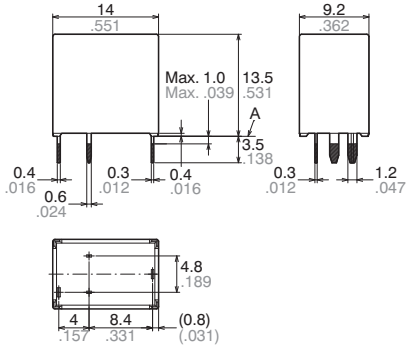

PC board pattern (Bottom view)

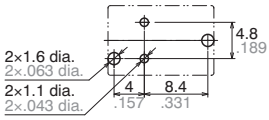

Tolerance: ±0.1 ±.004

Schematic (Bottom view)

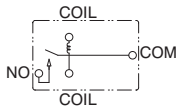

Dimension:	Tolerance
Less than 1mm .039inch:	±0.1 ±.004
Min. 1mm .039inch less than 3mm .118 inch:	±0.2 ±.008
Min. 3mm .118 inch:	±0.3 ±.012

* The lamp control type has polarized contacts. Connect N.O. to the "+ (plus)" side.

* Dimensions (thickness and width) of terminal is measured before pre-soldering. Intervals between terminals is measured at A surface level.

1 Form C type

External dimensions

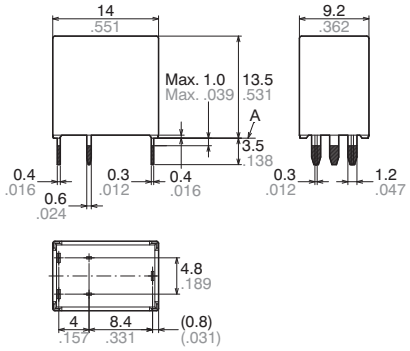

PC board pattern (Bottom view)

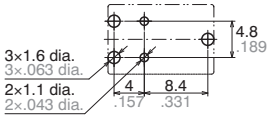

Tolerance: ±0.1 ±.004

Schematic (Bottom view)

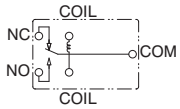

Dimension:	Tolerance
Less than 1mm .039inch:	±0.1 ±.004
Min. 1mm .039inch less than 3mm .118 inch:	±0.2 ±.008
Min. 3mm .118 inch:	±0.3 ±.012

* The lamp control type has polarized contacts. Connect N.O. to the "+ (plus)" side.

* Dimensions (thickness and width) of terminal is measured before pre-soldering. Intervals between terminals is measured at A surface level.

Twin type (8 terminals type)

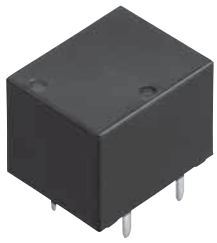

External dimensions

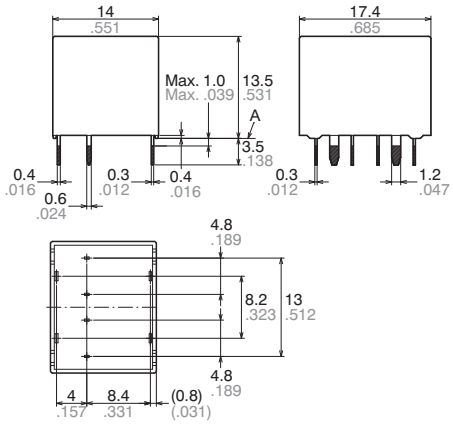

PC board pattern (Bottom view)

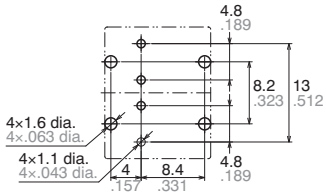

Tolerance: ±0.1 ±.004

Schematic (Bottom view)

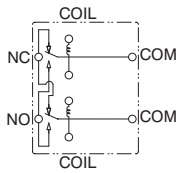

Dimension:	Tolerance
Less than 1mm .039inch:	±0.1 ±.004
Min. 1mm .039inch less than 3mm .118 inch:	±0.2 ±.008
Min. 3mm .118 inch:	±0.3 ±.012

* Dimensions (thickness and width) of terminal is measured before pre-soldering. Intervals between terminals is measured at A surface level.

Downloaded From Oneyac.com

TB (ACTB)

Twin type (10 terminals type)

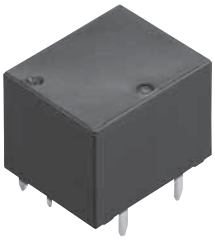

External dimensions

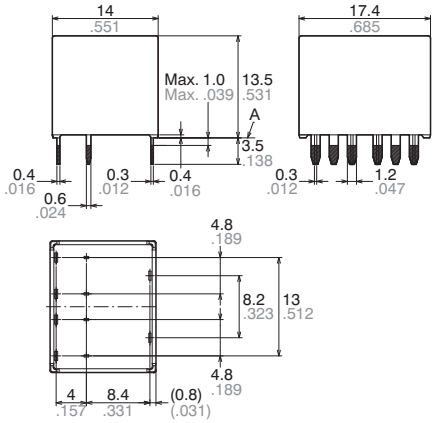

PC board pattern (Bottom view)

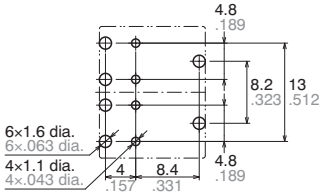

Tolerance: ±0.1 ±.004

Schematic (Bottom view)

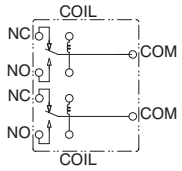

Dimension:	Tolerance
Less than 1mm .039inch:	±0.1 ±.004
Min. 1mm .039inch less than 3mm .118 inch:	±0.2 ±.008
Min. 3mm .118 inch:	±0.3 ±.012

* The lamp control type has polarized contacts. Connect N.O. to the "+ (plus)" side.

* Dimensions (thickness and width) of terminal is measured before pre-soldering. Intervals between terminals is measured at A surface level.

1 Form A type
Pin in Paste type

External dimensions

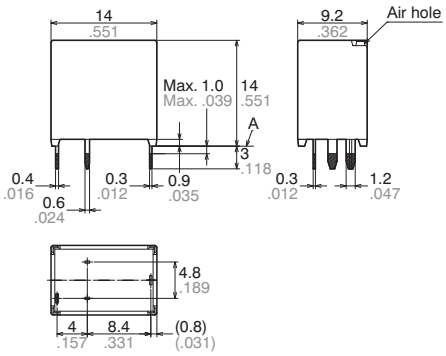

PC board pattern (Bottom view)

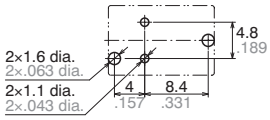

Tolerance: ±0.1 ±.004

Schematic (Bottom view)

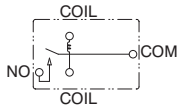

Dimension:	Tolerance
Less than 1mm .039inch:	±0.1 ±.004
Min. 1mm .039inch less than 3mm .118 inch:	±0.2 ±.008
Min. 3mm .118 inch:	±0.3 ±.012

* The lamp control type has polarized contacts. Connect N.O. to the "+ (plus)" side.

* Dimensions (thickness and width) of terminal is measured before pre-soldering. Intervals between terminals is measured at A surface level.

1 Form C type
Pin in Paste type

External dimensions

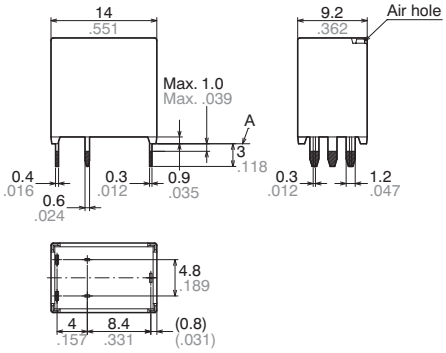

PC board pattern (Bottom view)

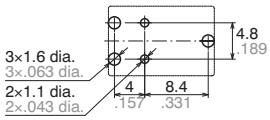

Tolerance: ±0.1 ±.004

Schematic (Bottom view)

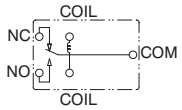

Dimension:	Tolerance
Less than 1mm .039inch:	±0.1 ±.004
Min. 1mm .039inch less than 3mm .118 inch:	±0.2 ±.008
Min. 3mm .118 inch:	±0.3 ±.012

* The lamp control type has polarized contacts. Connect N.O. to the "+ (plus)" side.

* Dimensions (thickness and width) of terminal is measured before pre-soldering. Intervals between terminals is measured at A surface level.

Downloaded From Oneyac.com

Twin type (8 terminals type)
Pin in Paste type

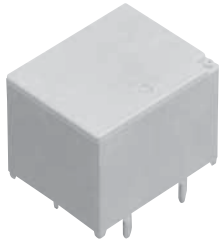

External dimensions

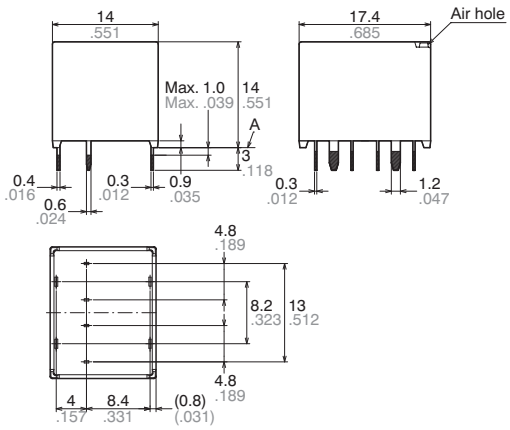

PC board pattern (Bottom view)

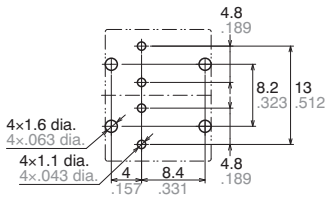

Tolerance: ±0.1 ±.004

Schematic (Bottom view)

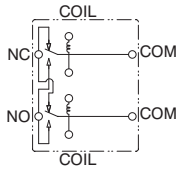

Dimension:	Tolerance
Less than 1mm .039inch:	±0.1 ±.004
Min. 1mm .039inch less than 3mm .118 inch:	±0.2 ±.008
Min. 3mm .118 inch:	±0.3 ±.012

* Dimensions (thickness and width) of terminal is measured before pre-soldering. Intervals between terminals is measured at A surface level.

Twin type (10 terminals type)
Pin in Paste type

External dimensions

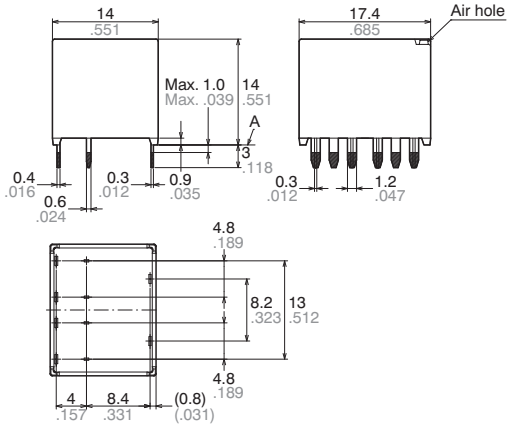

PC board pattern (Bottom view)

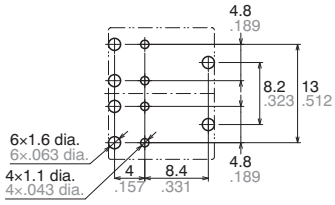

Tolerance: ±0.1 ±.004

Schematic (Bottom view)

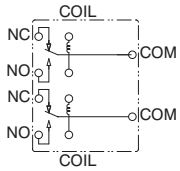

Dimension:	Tolerance
Less than 1mm .039inch:	±0.1 ±.004
Min. 1mm .039inch less than 3mm .118 inch:	±0.2 ±.008
Min. 3mm .118 inch:	±0.3 ±.012

* The lamp control type has polarized contacts. Connect N.O. to the “+ (plus)” side.

* Dimensions (thickness and width) of terminal is measured before pre-soldering. Intervals between terminals is measured at A surface level.

Downloaded From Oneyac.com

NOTES

Usage, transport and storage conditions

1) Ambient temperature, humidity, and atmospheric pressure during usage, transport, and storage of the relay:
(1) Temperature: –40 to +85°C –40 to +185°F (Standard type)
–40 to +110°C –40 to +230°F (High heat-resistant type/Pin in Paste type)
(2) Humidity: 2 to 85% RH (Avoid freezing and condensation.)
(3) Atmospheric pressure: 86 to 106 kPa
The humidity range varies with the temperature. Use within the range indicated in the graph below.
(Temperature and humidity range for usage, transport, and storage)

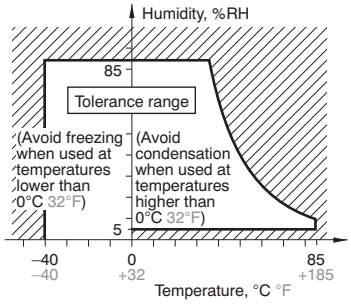

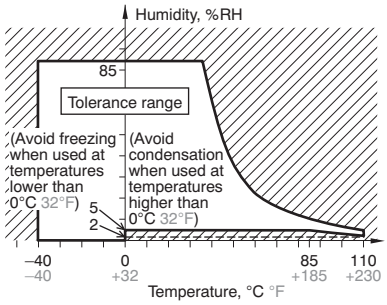

For Cautions for Use, see Relay Technical Information.

Downloaded From Oneyac.com

ONEYAC 唯样商城 电子元器件线上授权代理开拓者
原厂授权 · 正品现货 · 一件即发

单击下面可查看定价，库存，交付和生命周期等信息

>>Panasonic(松下)

Downloaded From Oneyac.com